Cross & Morse Torque Limiters

Cross & Morse Torque Limiters are low cost protection devices that limit torque in a drive system by slipping when a preset value is exceeded, in order to:-

Prevent machine and drive damage.
Eliminate costly machine downtime.

The Torque Limiter is a protective device that limits torque transmitted in a drive system by slipping when a preset value is exceeded as a result of shock load, overload or machine jam. It automatically re-engages, when the overload is removed, no setting being required, Torque is transmitted by spring loaded friction faces, the value being preset by adjustment of the spring force by simple setting of the adjustment nuts and bolts. The Torque Limiter is suitable to use with sprockets, gears, pulleys or a flange plate as the centre member clamped between the friction facings. The Torque Limiter is not a new product with Cross & Morse. In 1949 Morse introduced the first spring loaded, friction type protective device which was developed to today's line of products consisting of 7 sizes, the models 200M to 700M being the most popular units. To further extend the capabilities of our products a new metric series of clutches, consisting of 6 sizes from M30 to M280 has been added, to cater for higher torque applications, and areas where space is limited. As originator of the Torque Limiter, Morse gained vast experience in the design and application of these units as trouble free and long lasting protective devices. Many thousand units have been fitted to conveyors, mechanical handling equipment and agricultural machines.

Morse Torque Limiters incorporate design features for long life and reliability.

Correct Spring Selection and Ratings

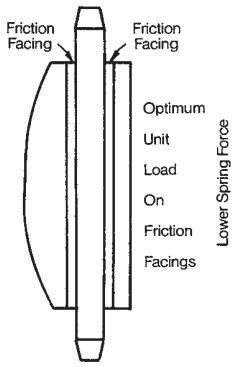

Torque Limiter capacities are directly proportional to the spring force applied to the friction surfaces and it is a simple matter to increase capacity by increasing spring force - but not without a sacrifice. The higher the unit load or pressure (psi) on the friction surfaces, the quicker the friction facings will deteriorate as they slip against the pressure plates and centre member. Morse ratings are realistic and are consistent with optimum spring loads and face pressures that permit longer slip time, maintain re-engagement at pre-set torque, and provide long-lasting protection.
The spring is designed so that its force varies little over a wide deflection range at the rated capacity of the torque limiter. This assures load re-engagement near the pre-set torque level as the friction facing wears. It is characteristic of a disc spring that it is more unstable and erratic in the lower end of its load vs. deflection curve; Morse therefore established minimum torque ratings consistent with spring characteristics.

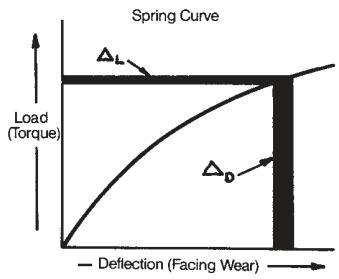

Cross & Morse Torque Limiters offer you the following Benefits:

- *Simple Design*
- *Easy Adjustment*
- *Wide Torque Range*
- *Minimum Maintenance*
- *Corrosion Resistant*
- *Infinite Torque Adjustment Settings*
- *Economical*
- *Compact*
- *Dependable*
- *Durable*
- *Low Cost*

Conclusion

The incorporation of an inexpensive Cross & Morse Torque Limiter improves machine design, safeguards production, and minimises the downtime so ensuring increased productivity and profits.

Tel: +44 121 360 0155 Fax: +44 121 325 1079 Email: sales@crossmorse.com

Standard Torque Limiters

Original Morse Series Torque Limiters

Developed from the original Torque Limiters produced in 1949, these well proven units are based on Imperial dimensions. Imitated by many over the years these units provide the ideal low cost solution to overload protection for torques between 3 & 1500 Nm. For Torque Limiter selection refer to page 6.

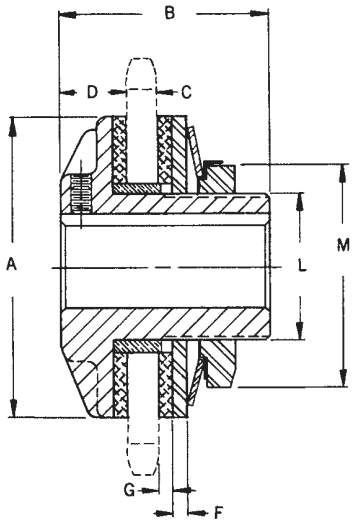

Models 200M, 250M & 350M

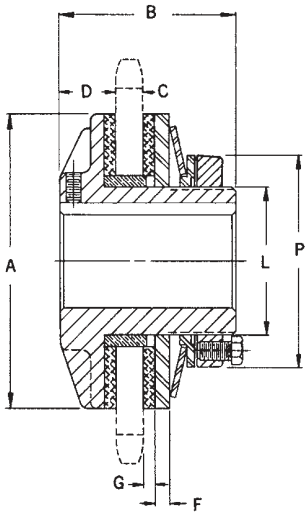

Models 500M & 700M

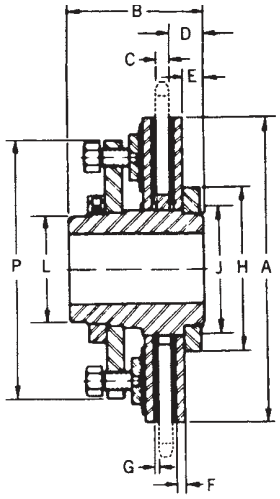

Models 13 & 20

Dimensions

*Model	Torque min	Torque max	Stock min plain bore	Stock Finish bores	Max Bore with Std Keyway	†Standard Bush Lengths (Ref.)	Set Screw	A	B	C (max)	D	F	G	L	M A/F	P	Weight
	Nm	Nm	mm	mm	mm	mm		mm	mm	mm	mm	mm	mm	mm	mm	mm	kg
200M1 200M2	3 6	13 25	9.5	19 20	22	(275, 365, 480, 551) 7.0, 9.5, 11.5, 13.4	M5	52	48	9	16	4.0	3.5	34.9	46		0.4
250M1 250M2	7 12	34 67	9.5	15 19 20	22	(275, 365, 480, 551) 7.0, 9.5, 11.5, 13.4	M5	64	48	9	16	4.0	3.5	34.9	46		0.5
350M1 350M2	20 34	100 200	18	20 24 25	25	(365, 480, 551, 628, 829) 9.5, 11.5, 13.4 16.0, 20.3	M6	89	62	16	19	4.0	3.5	42.9	60		1.1
500M1 500M2	48 88	283 566	22	25 28 30 35 38 40	41	(480, 551, 628, 829) 11.5, 13.4, 16.0, 20.3	M8	127	76	16	22	6.5	3.5	63.5	-	92	3.0
700M1 700M2	110 224	770 1540	24	40 45 48 50 60	64	(520, 580, 667, 868, 966, 1187, 1375) 13.2, 14.7, 16.9, 22.3, 24.6, 30.2, 34.9	M10	178	98	29	24	8.0	5.0	95.3	-	133	6.8
13-8 (1) 13-16 (1)	678 1356	1966 3120	38.1		82	(375, 500, 562) 9.5, 12.7, 14.3	-	330	146	22	36	9.5	4.8	114.3	-	279	38.6
20-5 (1) 20-10 (1)	2135 4270	4270 8540	50.8		124	(500, 625) 12.7, 15.9	-	508	184	24	46	12.5	4.8	165.1	-	413	115.0

*M1 Torque Limiters Fitted One Disc Spring.
M2 Torque Limiters Fitted Two Disc Springs.

†Torque Limiter supplied standard without Bush, which is supplied with Platewheel.
If Bush required, specify on order which length (size) required.

For procedure to select Torque Limiters refer to page 6.
For range of standard platewheels refer to page 7.

(1) Sizes 13 & 20 Torque Limiters for replacement purposes only
Refer Metric sizes M200 - M280 for new applications.

Tel: +44 121 360 0155 Fax: +44 121 325 1079 Email: sales@crossmorse.com

Torque Limiters Selection

Selection Procedure

1. Determine if the Torque Limiter is to be mounted on input (driver) or output (driven) shaft. Mounting on input shaft is normally lowest cost, and spreads load on Limiter body in overload slip, but if frequent slip occurs longer wear life of friction facings is obtained with the Torque Limiter on the output shaft.

2. Determine normal Drive Torque from input Power and Shaft Speed using formulae:-

$$\text{Torque Nm} = \frac{\text{H.P.} \times 7124}{\text{R.P.M.}} \qquad \text{Torque Nm} = \frac{\text{kW} \times 9550}{\text{R.P.M.}}$$

3. Decide on required Slip Torque, normally between 1.2 and 1.5 times Drive Torque dependant on frequency of machine stop-start cycles.

4. Refer to pages 4 and 5, select size of Torque Limiter where Rated Torque slightly exceeds Slip Torque. Confirm Selected Torque Limiter will accept drive shaft diameter.

5. Using capacity below, confirm selection of Torque Limiter. For machines under constant supervision or with motor overload sensors the 10 sec values should be used. For unmanned machines combination of torque and speed should always be within power ratings over 5 min to avoid deterioration of components parts due to temperature build-up. If necessary a larger Torque Limiter may have to be selected to provide sufficient heat dissipation.

6. Check Sprocket Tables below, to ensure that required size will fit selected Torque Limiter.

Dimensions

Torque Limiter Model	Maximum Operating RPM		kW Ratings according to max slip time					
	At Minimum Torque	50% Plus Torque Rating	Over 5 min	5 min	2 min	1 min	30 sec	10 sec
200M	1800	800	0.06	0.11	0.20	0.38	0.55	0.90
250M	1450	430	0.08	0.16	0.30	0.56	0.80	1.30
350M	1050	280	0.19	0.37	0.70	1.30	1.85	3.00
500M	750	250	0.47	0.93	1.70	3.25	4.65	7.50
700M	530	200	1.02	2.04	3.80	7.15	10.20	16.30
M30	3000	310	0.01	0.02	0.04	0.07	0.10	0.16
M40	2300	210	0.02	0.04	0.08	0.14	0.20	0.32
M45	2000	140	0.03	0.05	0.10	0.18	0.25	0.40
M200	475	100	1.29	2.50	4.80	9.00	12.90	20.60
M254	375	90	2.40	4.80	8.90	16.80	24.00	38.50
M280	340	80	2.95	5.85	10.80	20.50	29.25	47.00

Note: If your drive requirements do not permit selection of a Standard Torque Limiter by the above procedure contact Technical Department, Cross & Morse.

Minimum Sprocket Teeth and Bush Lengths for BS and ANSI Roller Chains

Chain Size		3/8" 06B/35		1/2" 08B/40		5/8" 10B/50		3/4" 12B/60		1" 16B/80		1 1/4" 20B/100		1 1/2" 24B/120		1 3/4" 28B/140		2" 32B/160	
Model No.	Bore Dia. mm	Sprocket Min. Teeth	Bush Length mm	Sprocket Min. Teeth	Bush Length mm	Sprocket Min. Teeth	Bush Length mm	Sprocket Min. Teeth	Bush Length mm	Sprocket Min. Teeth	Bush Length mm	Sprocket Min. Teeth	Bush Length mm	Sprocket Min. Teeth	Bush Length mm	Sprocket Min. Teeth	Bush Length mm	Sprocket Min. Teeth	Bush Length mm
200M	41.33 41.38	21	(365) 9.5	17	(480) 11.5	14	(551) 13.4												
250M	41.33 41.38	25	(365) 9.5	20	(480) 11.5	16	(551) 13.4												
350M	49.28 49.33	33	(365) 9.5	26	(480) 11.5	21	(551) 13.4	18	(628) 16.0	15	(829) 20.3								
500M	73.10 73.15			35	(480) 11.5	29	(551) 13.4	25	(628) 16.0	19	(829) 20.3								
700M	104.88 104.93			48	(520) 13.2	39	(580) 14.7	33	(667) 16.9	25	(868) 22.2	21	(966) 24.6	18	(1187) 30.2	16	(1187) 30.2	15	(1375) 34.9
13-	161.99 162.05									44	(375) 9.5	36	(500) 12.7	31	(562) 14.3	27	(562) 14.3	24	(562) 14.3
20-	222.33 222.40											54	(500) 12.7	46	(625) 15.9	40	(625) 15.9	35	(625) 15.9
M30	21.10 21.05	14	4.5[3]	12	6.0														
M40	26.10 26.05	17	8.0	14	8.0														
M45	35.12 35.07	19	9.0	15	9.0														
M200	120.18 120.10					43	15.5[3]	36	17.0[3]	28	22.5[3]	23	25.0[3]	20	29.0	17	29.0[1]	15	29.0[1]
M254	140.20 140.12							45	17.0[3]	35	22.5[3]	29	25.0[3]	24	31.8	21	31.8[2]	19	35.0[4]
M280	170.20 170.12							50	17.0[3]	38	22.5[3]	31	25.0[3]	26	31.8	23	31.8[2]	21	35.0[4]

[1] Platewheels require recess to fit Torque Limiter.
[2] Platewheels for BS series chains requires recess to fit Torque Limiter.
[3] Bushes require shortening to length indicated.
[4] Two bushes required to total length indicated.
For standard stock platewheels refer to page 7.

Tel: +44 121 360 0155 Fax: +44 121 325 1079 Email: sales@crossmorse.com

Torque Limiters Platewheels

CROSS+MORSE

Stock Machined Platewheels for BS Roller Chain

Morse recommend and offer as stock items, specially machined platewheels for use with Torque Limiters. Both faces of Morse Torque Limiter Platewheels are machined to 1.6μm surface finish. Uniform surfaces and parallel faces ensure that Morse Torque Limiters will reliably maintain correct torque release and re-engagement. For the most economical drive design, select a platewheel from the increased range of standard stock platewheels.

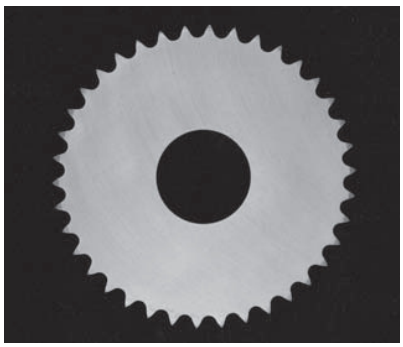

Fits Torque Limiter Number	Catalogue Number	Chain Pitch inches	Number of Teeth	Outside Diameter mm	Bore Dia. over Bushing mm	Max. Width mm	Bush Size	Bush Length mm	Weight kg
M30	M30G06B1-16	0.375	16	52.3	21.1	5.33		5.0	0.06
	M30G06B1-19	0.375	19	61.3	-0.05	5.33		5.0	0.09
M40	M40G06B1-19	0.375	19	61.3	26.1	5.33		7.0	0.09
	M40G06B1-22	0.375	22	71.0	-0.05	5.33		7.0	0.12
M45	M45G06B1-22	0.375	22	71.0	35.12	5.33		8.8	0.12
	M45G08B1-19	0.500	19	82.3	-0.05	7.24		8.8	0.18
200M	200G06B1-21	0.375	21	67.8	41.38	5.33	365	9.5	0.11
	200G06B1-23	0.375	23	73.5	-0.05	5.33	365	9.5	0.13
	200G08B1-19	0.500	19	82.3		7.24	480	11.5	0.18
250M	250G06B1-25	0.375	25	80.0	41.38 -0.05	5.33	365	9.5	0.14
	250G06B1-38	0.375	38	119.4		5.33	365	9.5	0.36
	250G08B1-20	0.500	20	85.8		7.24	480	11.5	0.21
	250G08B1-21	0.500	21	90.4		7.24	480	11.5	0.23
	250G08B1-22	0.500	22	94.5		7.24	480	11.5	0.27
	250G08B1-23	0.500	23	98.5		7.24	480	11.5	0.32
	250G08B1-25	0.500	25	106.4		7.24	480	11.5	0.36
	250G08B1-30	0.500	30	127.5		7.24	480	11.5	0.54
	250G08B1-38	0.500	38	159.0		7.24	480	11.5	0.91
	250G08B1-57	0.500	57	236.1		7.24	480	11.5	2.15
	250G10B1-19	0.625	19	104.1		9.02	551	13.4	0.41
	250G10B1-21	0.625	21	114.1		9.02	551	13.4	0.50
	250G10B1-23	0.625	23	124.2		9.02	551	13.4	0.64
	250G10B1-25	0.625	25	134.4		9.02	551	13.4	0.75
	250G10B1-38	0.625	38	199.6		9.02	551	13.4	1.78
	250G10B1-57	0.625	57	296.0		9.02	551	13.4	4.29
350M	350G06B1-38	0.375	38	119.4	49.33 -0.05	5.33	365	9.5	0.38
	350G08B1-27	0.500	27	114.5		7.24	480	11.5	0.40
	350G08B1-30	0.500	30	127.5		7.24	480	11.5	0.53
	350G08B1-38	0.500	38	159.0		7.24	480	11.5	0.91
	350G08B1-57	0.500	57	236.1		7.24	480	11.5	2.14
	350G10B1-21	0.625	21	114.1		9.02	551	13.4	0.47
	350G10B1-23	0.625	23	124.2		9.02	551	13.4	0.62
	350G10B1-24	0.625	24	129.3		9.02	551	13.4	0.68
	350G10B1-25	0.625	25	134.4		9.02	551	13.4	0.73
	350G10B1-38	0.625	38	199.6		9.02	551	13.4	1.73
	350G10B1-57	0.625	57	296.0		9.02	551	13.4	4.27
	350G10B1-76	0.625	76	392.1		9.02	551	13.4	7.72
	350G12B1-19	0.750	19	125.2		10.97	628	16.0	0.73
	350G12B1-21	0.750	21	137.2		10.97	628	16.0	0.91
	350G12B1-23	0.750	23	150.2		10.97	628	16.0	1.15
	350G12B1-25	0.750	25	161.3		10.97	628	16.0	1.38
	350G12B1-38	0.750	38	239.8		10.97	628	16.0	3.04
	350G12B1-57	0.750	57	355.4		10.97	628	16.0	7.58
	350G12B1-76	0.750	76	469.9		10.97	628	16.0	13.65
500M	500G08B1-38	0.500	38	159.0	73.15 -0.05	7.24	480	11.5	0.82
	500G08B1-57	0.500	57	236.1		7.24	480	11.5	2.10
	500G08B1-76	0.500	76	312.4		7.24	480	11.5	3.70
	500G10B1-38	0.625	38	199.6		9.02	551	13.4	1.54
	500G10B1-57	0.625	57	296.0		9.02	551	13.4	4.24
	500G10B1-76	0.625	76	392.1		9.02	551	13.4	7.69
	500G12B1-25	0.750	25	161.3		10.97	628	16.0	1.13
	500G12B1-28	0.750	28	179.6		10.97	628	16.0	1.59
	500G12B1-38	0.750	38	239.8		10.97	628	16.0	2.81
	500G12B1-57	0.750	57	355.4		10.97	628	16.0	7.52
	500G12B1-76	0.750	76	469.9		10.97	628	16.0	13.59
	500G16B1-19	1.000	19	166.6		16.08	829	20.3	2.31
	500G16B1-21	1.000	21	184.9		16.08	829	20.3	2.81
	500G16B1-23	1.000	23	200.7		16.08	829	20.3	3.20
	500G16B1-25	1.000	25	216.7		16.08	829	20.3	3.81
	500G16B1-38	1.000	38	320.5		16.08	829	20.3	7.42
700M	700G10B1-39	0.625	39	205.0	104.93 -0.05	9.02	580	14.7	1.54
	700G10B1-57	0.625	57	295.7		9.02	580	14.7	3.85
	700G10B1-76	0.625	76	392.1		9.02	580	14.7	7.65
	700G12B1-38	0.750	38	239.8		10.97	667	16.9	2.72
	700G12B1-57	0.750	57	355.4		10.97	667	16.9	7.47
	700G12B1-76	0.750	76	469.9		10.97	667	16.9	13.55
	700G16B1-28	1.000	28	240.5		16.08	868	22.2	3.72
	700G16B1-38	1.000	38	320.5		16.08	868	22.2	7.39
	700G16B1-57	1.000	57	474.0		16.08	868	22.2	17.90
	700G20B1-21	1.250	21	230.9		18.57	966	24.6	3.76
M200	M200G16B1-30	1.000	30	254.0	120.18 -0.08	16.08		28.0	4.20
M254	M254G24B1-24	1.500	24	306.8	140.2 -0.08	24.10		31.8	9.30
M280	M280G24B1-30	1.500	30	379.5	170.2 -0.08	24.10		31.8	14.50

For accurate torque setting and applications where slippage may be frequent, it is essential that a ground plate sprocket is used. Rated torque capacity can only be obtained with dry friction facings and a ground plate sprocket which has been run-in for 500 revolutions at 50% maximum torque rating for the single spring unit at a speed not exceeding 120 r.p.m.

Torque Limiters are suitable for running in oil. As a general rule the torque capacity will be reduced to .25 of the stated torque when using SAE 30 oil. Torque Limiters to run in oil should have the friction facings soaked in oil before assembly.

Tel: +44 121 360 0155 Fax: +44 121 325 1079 Email: sales@crossmorse.com

Torque Limiter Couplings

Torque Limiter combined with Roller Chain Flexible Coupling

The Torque Limiter Coupling combines overload protection with ability to connect in-line shafts. The unit consists of a standard Torque Limiter and platewheel connected to a special coupling sprocket by duplex Roller Chain. Available in eleven standard sizes, they are easy assembly units providing protection and reliability. For selection refer to page 6.

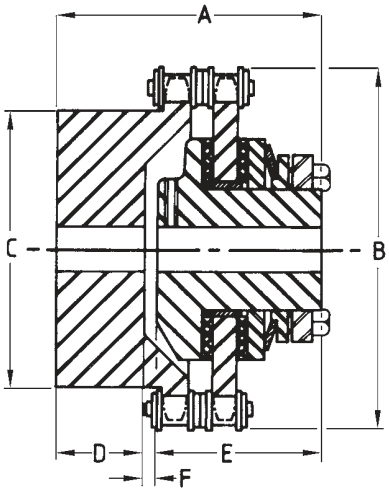

Capacities and Dimensions

Catalogue Number	Misalignment		Torque Capacity Nm		Minimum Plain Bore		Maximum Bore		Sprocket Size	Dimensions mm						Weight* Kg
	Max. Pall. mm	Max. Angle	Min.	Max.	Limiter mm	Coupling mm	Limiter mm	Coupling mm		A	B	C	D	E	F	
M30-2C	0.20	30'	3	10	4.5	11	11	22	06B-16	55.0	57.1	37.0	22.5	31.0	1.5	0.5
M40-1C M40-2C M40-3C	0.20	30'	4 7 10	15 28 40	7	8	14	35	06B-22	55.0	75.2	55.0	25.0	28.0	2.0	0.8
M45-1C M45-2C M45-3C	0.20	30'	7 13 17	30 55 70	7	8	20	40	06B-22	59.5	75.2	55.0	25.0	33.0	1.5	0.9
200M-1C 200M-2C	0.25	30'	3 6	13 25	11	14	22	42	08B-20	73.3	93.0	66.0	22.0	47.6	3.7	1.8
250M-1C 250M-2C	0.25	30'	7 12	34 67	11	11	22	50	08B-22	76.7	101.0	75.4	25.4	47.6	3.7	2.0
350M-1C 350M-2C	0.31	30'	20 34	100 200	18	18	25	70	10B-24	103.7	136.5	104.4	38.1	61.9	3.7	5.2
500M-1C 500M-2C	0.38	30'	48 88	283 566	22	22	41	95	12B-28	121.2	186.8	149.3	41.3	76.2	3.7	12.2
700M-1C 700M-2C	0.51	30'	110 224	770 1540	24	24	64	135	16B-28	168.1	247.5	199.4	66.7	98.4	3.0	31.3
M200-24C	0.51	30'	440 800	2200 4000	35	35	80	100	16B-30	194.0	264.0	150.0	85.0	105.0	3.0	41.5
M254-32C	0.76	30'	760 1350	3800 6800	48	51	90	150	24B-24	214.0	326.0	232.0	90.0	120.0	4.0	74.6
M280-32C	0.76	30'	1100 2000	5500 10000	48	51	120	200	24B-30	214.0	398.0	302.0	90.0	120.0	4.0	98.2

*Weights are for Torque Limiter and Coupling unbored.

Good Reasons to fit a Morse Torque Limiter on your Equipment.

Design
Protection for expensive components within the drive system or structural framework, gives longer machine life with increased reliability in service, and reduction of expensive downtime.

Maintenance
Maintenance is reduced by the inherent protection offered by the torque limiter, which in itself is inexpensive, corrosion resistant, and extremely easy to maintain.

Product Improvement
Many existing machines can be fitted with a torque limiter, without modification to the design, by replacing a sprocket with a torque limiter fitted with a platewheel, or for in-line drives by replacing existing coupling with a torque limiter coupling.

Tel: +44 121 360 0155 Fax: +44 121 325 1079 Email: sales@crossmorse.com