Guide rail clamps

Guide rail clamp
(for trapezoidal rails)

Part. **230**

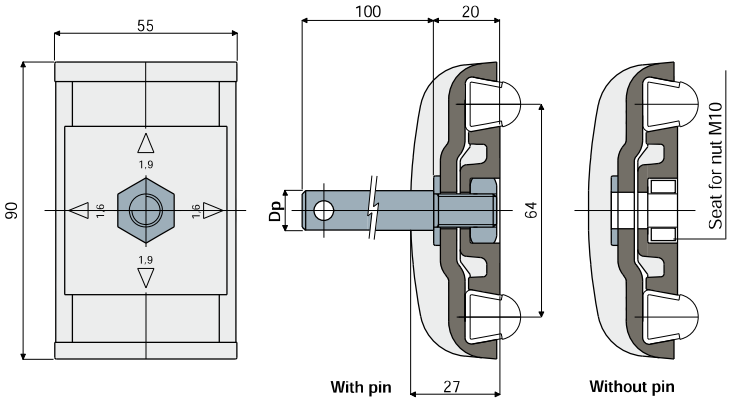

Rail for this type of clamp

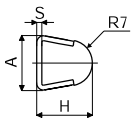

S (mm)	H (mm)	A (mm)
1.5	17.5	16
2	18	17

Dp Pin diameter (mm)	With pin Code	Without pin Code
12	230 / 80684	
14	230 / 80685	230 / 80611
16	230 / 80686	

MATERIALS: Clamp made of reinforced polyamide black colour; pin, nut and washer made of stainless steel AISI 304.
FEATURES: Supplied with or without support pin. With this item it is possible to use thickness 1,5 and 2 mm guides, by rotating for 90° the central plate: Part.354, 377, 419, 418, 420, 353.
BOX QUANTITY: 24 pieces.
ON REQUEST:
- **Clamps:** In reinforced polypropylene, other colours.
- **Box Quantity:** According to your request.

Guide rail clamp
(for rectangular rails)

Part. **289**

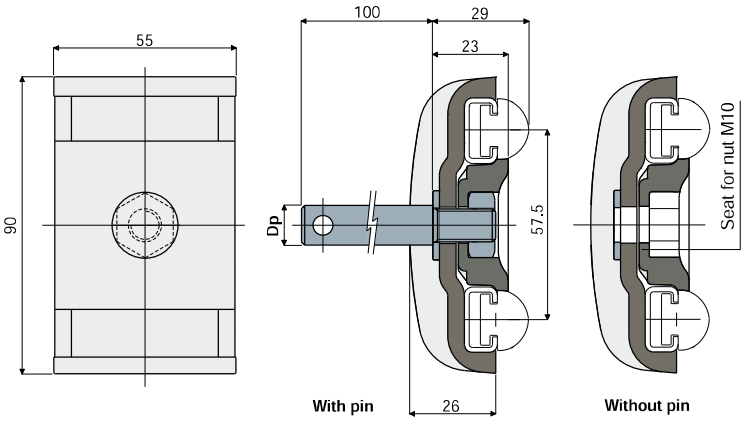

Rail for this type of clamp

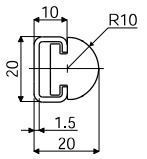

Dp Pin diameter (mm)	With pin Code	Without pin Code
12	289 / 82569	
14	289 / 82570	289 / 82572
16	289 / 82571	

MATERIALS: Clamp made of reinforced polyamide black colour; pin, nut and washer made of stainless steel AISI 304.
FEATURES: Supplied with or without support pin. To be used for the support of the product guide rail Part.373.
BOX QUANTITY: 24 pieces.
ON REQUEST:
- **Clamps:** In reinforced polypropylene, other colours.
- **Box Quantity:** According to your request.

Guide rail clamps

Part. 229 Guide rail clamp
(for round rails)

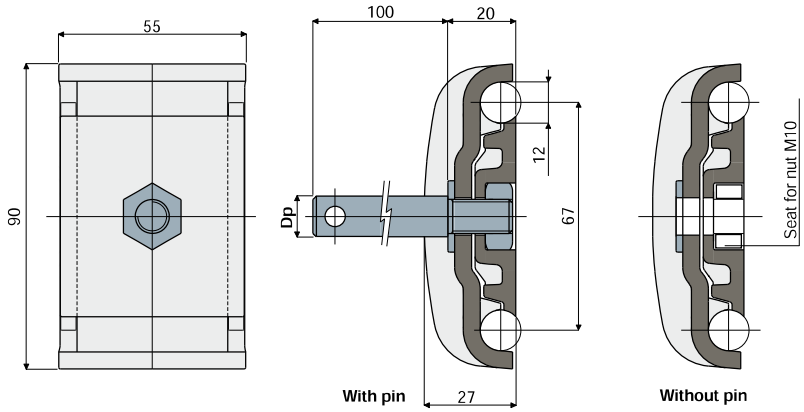

Dp Pin diameter (mm)	With pin Code	Without pin Code
12	229 / 80681	
14	229 / 80682	229 / 80609
16	229 / 80683	

MATERIALS: Clamp made of reinforced polyamide black colour; pin, nut and washer made of stainless steel AISI 304.
FEATURES: Supplied with or without support pin.
BOX QUANTITY: 24 pieces.
ON REQUEST:
- Clamps: In reinforced polypropylene, other colours.
- Box Quantity: According to your request.

Part. 231 Guide rail clamp
(for round rails)

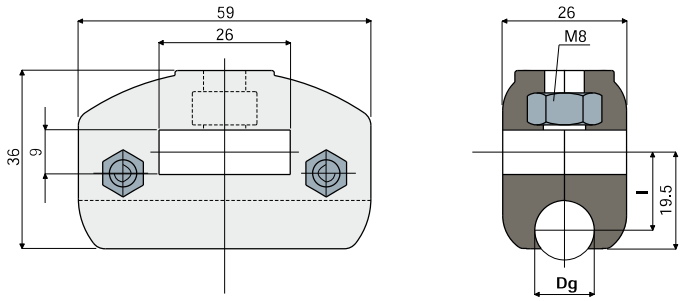

Dg Rail diameter (mm)	l (mm)	Code
8	16	231 / 80749
10	15	231 / 80788
12	15	231 / 80687
14	15	231 / 80787

MATERIALS: Clamp made of reinforced polyamide black colour; bolts and nuts made of stainless steel AISI 304.
FEATURES: Supplied assembled. To be used with flat support with sizes 25x8 mm.
BOX QUANTITY: 24 pieces.
ON REQUEST:
- Clamps: In reinforced polypropylene, other colours.
- Box Quantity: According to your request.

Guide rail clamps

Guide rail clamp
(for trapezoidal rails)

Part. **232**

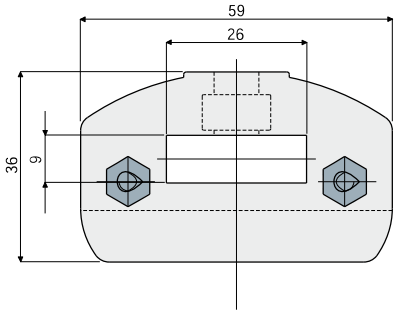

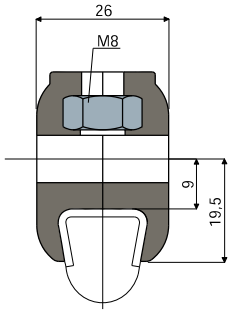

Rail for this type of clamp

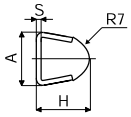

S (mm)	H (mm)	A (mm)
1.5	17.5	16
2	18	17

Code
232 / 80688

MATERIALS: Clamp made of reinforced polyamide black colour; bolts and nuts made of stainless steel AISI 304.
FEATURES: Supplied assembled. To be used with flat support with sizes 25x8 mm. With this item it is possible to use thickness 1,5 and 2 mm guides: Part.354, 377, 419, 418, 420, 353.
BOX QUANTITY: 24 pieces.
ON REQUEST:

- Clamps: In reinforced polypropylene, other colours.
- Box Quantity: According to your request.

Guide rail clamp
(for rectangular rails)

Part. **291**

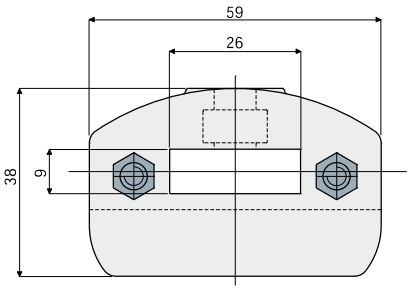

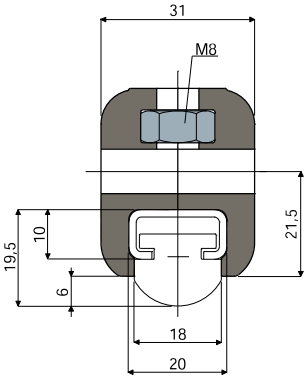

Rail for this type of clamp

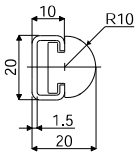

Code
291 / 82578

MATERIALS: Clamp made of reinforced polyamide black colour; bolts and nuts made of stainless steel AISI 304.
FEATURES: Supplied assembled. To be used with flat profile with sizes 25x8 mm. To be used for the support of the product guide rail Part.373.
BOX QUANTITY: 24 pieces.
ON REQUEST:

- Clamps: In reinforced polypropylene, other colours.
- Box Quantity: According to your request.

Guide rail clamps

Part. 346 Guide rail clamp
(for round rails)

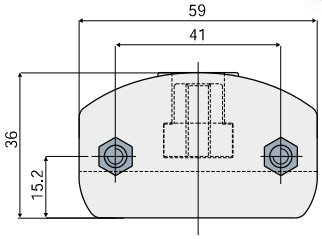

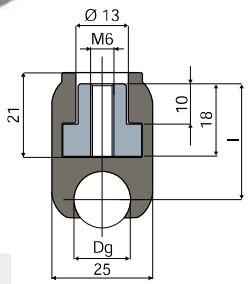

Dg Rail diameter (mm)	l (mm)	Code
8	30	346 / 83390
10	29.5	346 / 83391
12	29.5	346 / 83392
14	28.7	346 / 83393

MATERIALS: Clamp made of reinforced polyamide black colour; threaded insert in nickel plated brass; bolts and nuts in stainless steel AISI 304.
FEATURES: Designed appositely to be assembled directly on the pneumatic cylinder for the rails regulation. Supplied assembled.
BOX QUANTITY: 24 pieces.
ON REQUEST:
- Clamps: In reinforced polypropylene, other colours.
- Box Quantity: According to your request.

Example of application

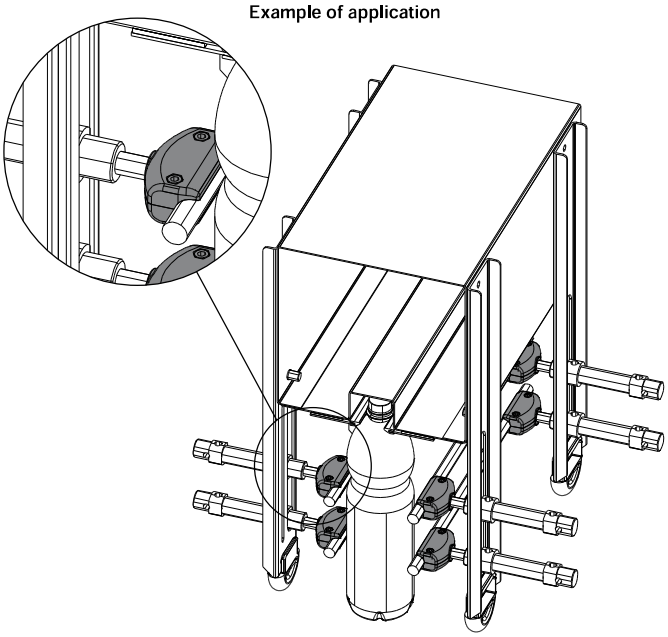

Part. 347 Guide rail clamp
(for trapezoidal rails)

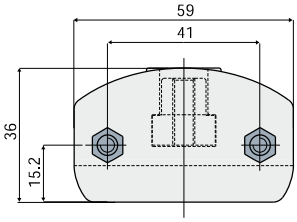

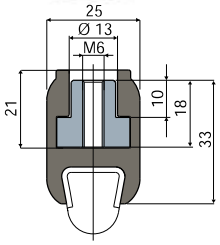

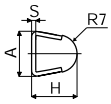

S (mm)	H (mm)	A (mm)
1,5	17,5	16
2	18	17

Code
347 / 83394

MATERIALS: Clamp made of reinforced polyamide black colour; threaded insert in nickel plated brass; bolts and nuts in stainless steel AISI 304.
FEATURES: Designed appositely to be assembled directly on the pneumatic cylinder for the rails regulation. With this item it is possible to use thickness 1,5 and 2 mm guides.: Part.354, 377, 419, 418, 420, 353. Supplied assembled.
BOX QUANTITY: 24 pieces.
ON REQUEST:
- Clamps: In reinforced polypropylene, other colours.
- Box Quantity: According to your request.

Example of application

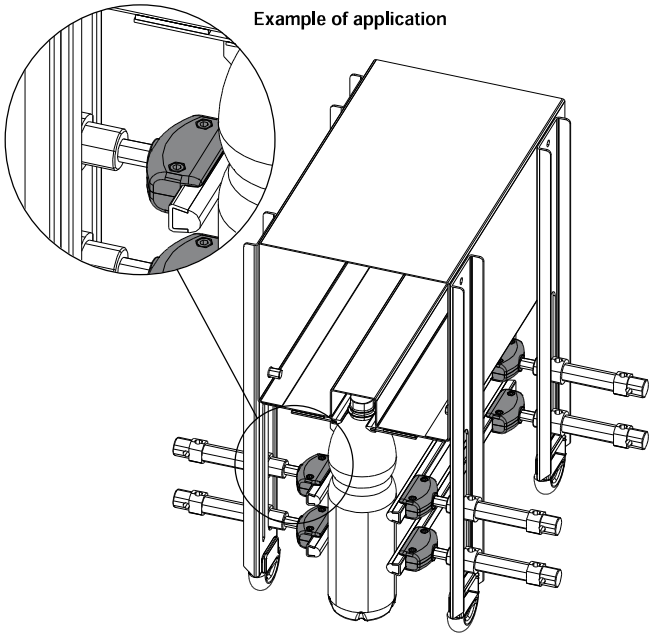

Guide rail clamps

Example of application

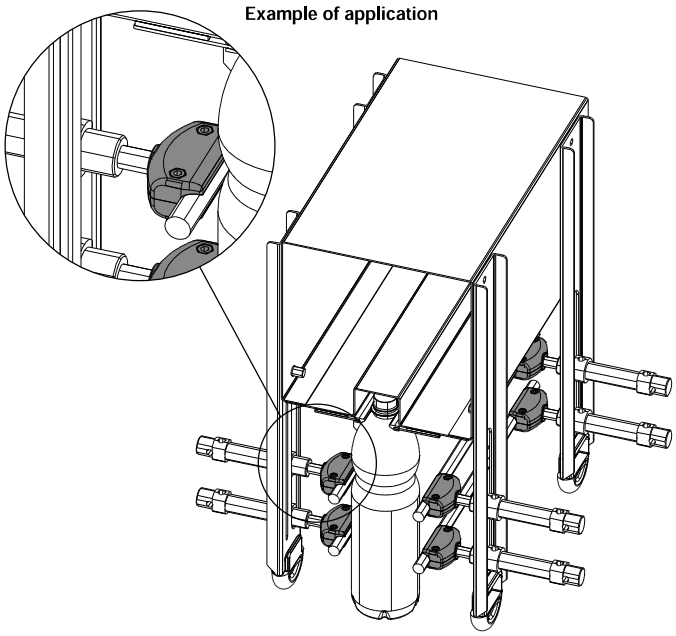

Guide rail clamp
(for round rails)

Part. **348**

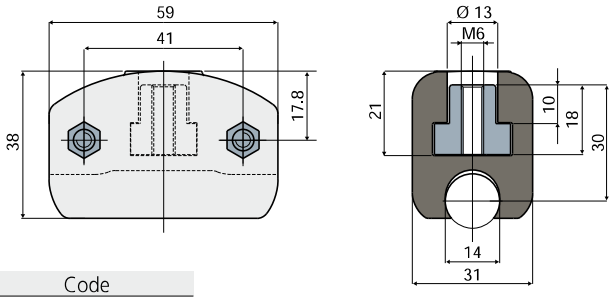

Code
348 / 83395

MATERIALS: Clamp made of reinforced polyamide black colour; threaded insert in nickel plated brass; bolts and nuts in stainless steel AISI 304.

FEATURES: Designed appositely to be assembled directly on the pneumatic cylinder for the rails regulation. Supplied assembled.

BOX QUANTITY: 24 pieces.

ON REQUEST:

- **Clamps:** In reinforced polypropylene, other colours.
- **Box Quantity:** According to your request.

Example of application

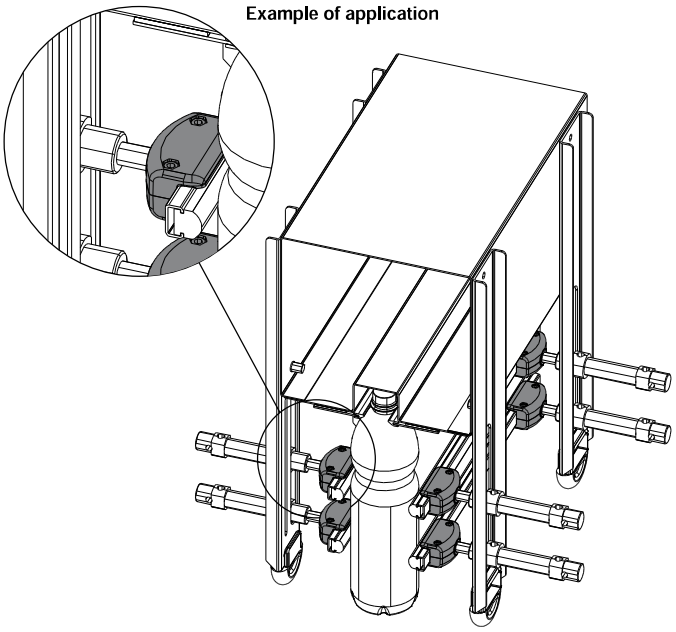

Guide rail clamp
(for rectangular rails)

Part. **349**

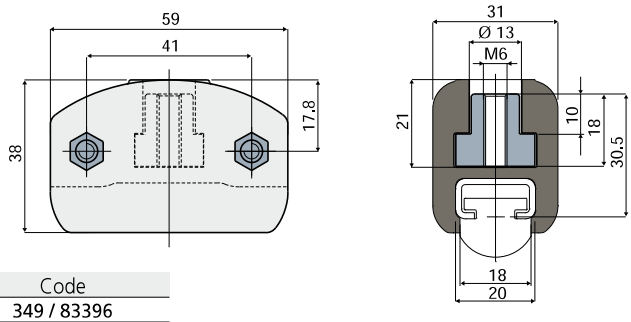

Code
349 / 83396

MATERIALS: Clamp made of reinforced polyamide black colour; threaded insert in nickel plated brass; bolts and nuts in stainless steel AISI 304.

FEATURES: Designed appositely to be assembled directly on the pneumatic cylinder for the rails regulation. To be used for the support of the product guide rail Part.373. Supplied assembled.

BOX QUANTITY: 24 pieces.

ON REQUEST:

- **Clamps:** In reinforced polypropylene, other colours.
- **Box Quantity:** According to your request.

Guide rail clamps

Part. 290 Guide rail clamp
(for rectangular rail)

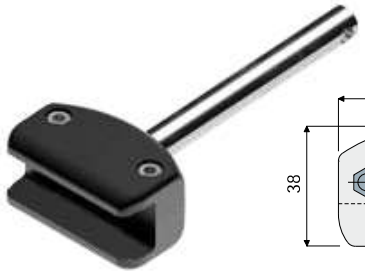

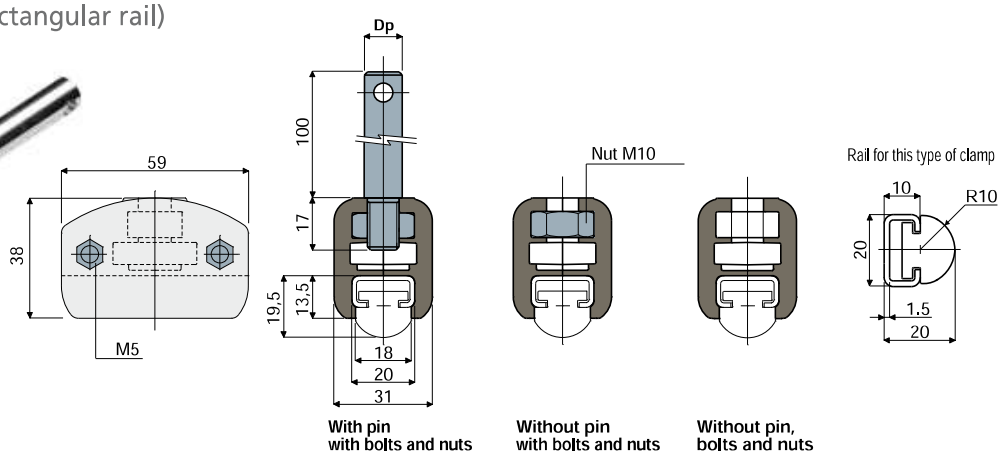

Dp Pin diameter (mm)	With pin with bolts and nuts	Without pin with bolts and nuts	Without pin, bolts and nuts
	Code	Code	Code
12	290 / 82573		
14	290 / 82574	290 / 82576	290 / 82577
16	290 / 82575		

MATERIALS: Clamp made of reinforced polyamide black colour; pin, bolts and nuts made of stainless steel AISI 304.
FEATURES: Supplied with or without support pin. To be used for the support of the product guide rail Part.373.
BOX QUANTITY: 24 pieces.
ON REQUEST:
- Clamps: In reinforced polypropylene, other colours.
- Box Quantity: According to your request.

Part. 301 Threaded pin

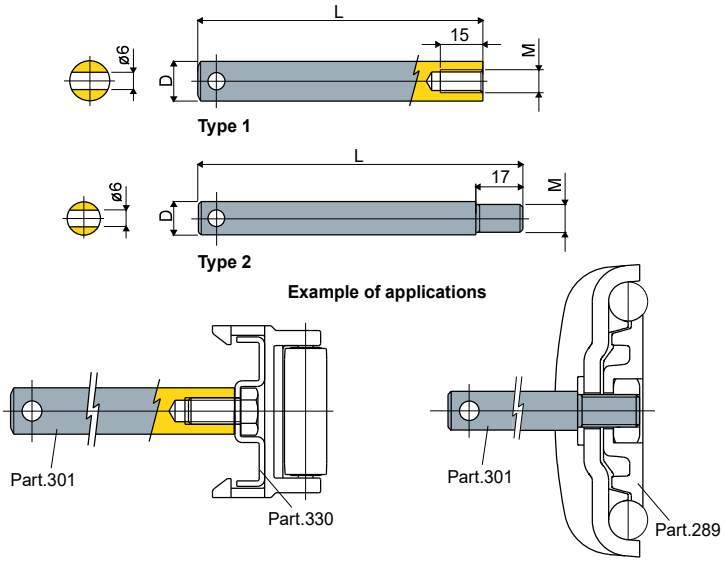

D (mm)	L (mm)	M (mm)	Type 1 Code
14	100	M8	301 / 82751

D (mm)	L (mm)	M (mm)	Type 2 Code
12	117	M10	301 / 83304
12	217	M10	301 / 83871
14	117	M10	301 / 83305
16	117	M10	301 / 83306
16	121	M10	301 / 84109

MATERIALS: Pin made of stainless steel AISI 304.
FEATURES: Type 1: can be mounted both on guide rail clamps or on side guides;
Type 2: used for the mounting of Part. 289, 229, 230, 290, 204, 205.
BOX QUANTITY: 24 pieces.
ON REQUEST:
- Pins: In various lengths.
- Box Quantity: According to your request.

Guide rail clamps

Guide rail clamp (for round rails) Part. 204

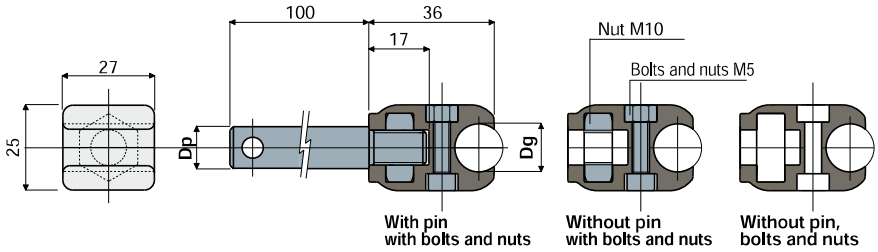

Dp Pin diameter (mm)	Dg Rail diameter (mm)	With pin with bolts and nuts Code
12	8	204 / 80798
	10	204 / 80799
	12	204 / 80800
	14	204 / 80801
14	8	204 / 80802
	10	204 / 80803
	12	204 / 80804
	14	204 / 80805
16	8	204 / 80806
	10	204 / 80807
	12	204 / 80808
	14	204 / 80809

Dg Rail diameter (mm)	Without pin with bolts and nuts Code
8	204 / 80810
10	204 / 80811
12	204 / 80812
14	204 / 80813

Dg Rail diameter (mm)	Without pin, bolts and nuts Code
8	204 / 80978
10	204 / 80979
12	204 / 80980
14	204 / 80981

MATERIALS: Clamp made of reinforced polyamide black colour; pin, bolts and nuts made of stainless steel AISI 304.
FEATURES: Supplied with or without support pin and with or without bolts and nuts.
BOX QUANTITY: 24 pieces.
ON REQUEST:

- **Clamps:** In reinforced polypropylene, other colours.
- **Box Quantity:** According to your request.

Guide rail clamp (for trapezoidal rails) Part. 205

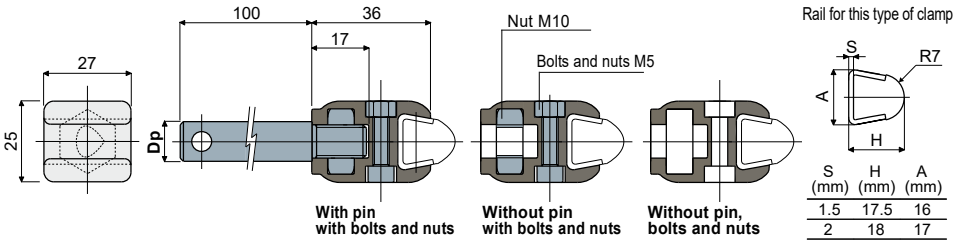

Dp Pin diameter (mm)	With pin with bolts and nuts Code	Without pin with bolts and nuts Code	Without pin, bolts and nuts Code
12	205 / 80814	205 / 80817	205 / 80982
14	205 / 80815		
16	205 / 80816		

MATERIALS: Clamp made of reinforced polyamide black colour; pin, bolts and nuts made of stainless steel AISI 304.
FEATURES: Supplied with or without support pin and with or without bolts and nuts. With this item it is possible to use thickness 1,5 and 2 mm guides: Part.354, 377, 419, 418, 420, 353.
BOX QUANTITY: 24 pieces.
ON REQUEST:

- **Clamps:** In reinforced polypropylene, other colours.
- **Box Quantity:** According to your request.

Guide rail clamps

Part. 412 Guide rail clamp

NEW

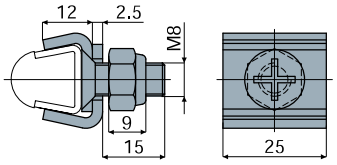

Example of application

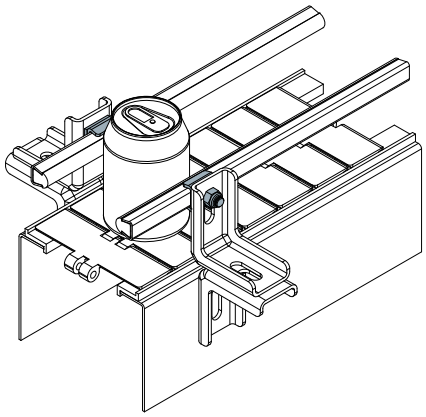

Code
412 / 84487

MATERIALS: Clamp, bolts and nuts made of stainless steel AISI 304.
FEATURES: With this item it is possible to use thickness 1,5 and 2 mm guides: Part.354, 377, 419, 418, 420, 353.
BOX QUANTITY: 24 pieces.
ON REQUEST:

- Box Quantity: According to your request.
- Assembly of: Bolts and nuts.

Part. 413 Guide rail clamp
(for connection)

NEW

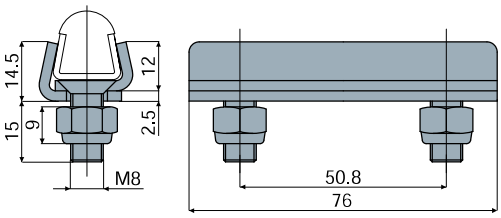

Example of application

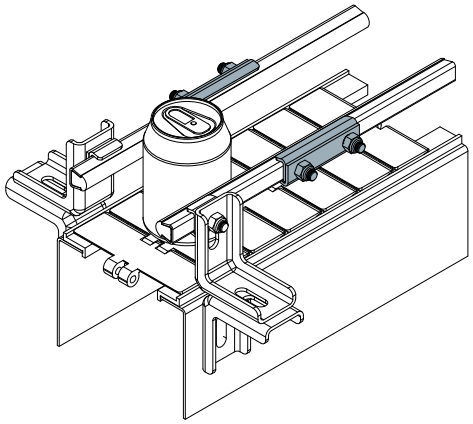

Code
413 / 84488

MATERIALS: Clamp, bolts and nuts made of stainless steel AISI 304.
FEATURES: With this item it is possible to use thickness 1,5 and 2 mm guides: Part.354, 377, 419, 418, 420, 353.
BOX QUANTITY: 24 pieces.
ON REQUEST:

- Box Quantity: According to your request.
- Assembly of: Bolts and nuts.

Guide rail clamps

Example of application

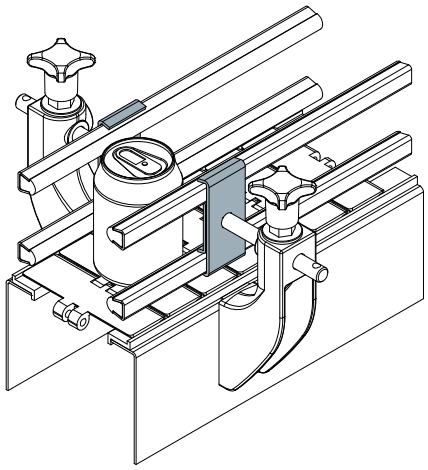

Guide rail clamp (double) Part. 410

NEW

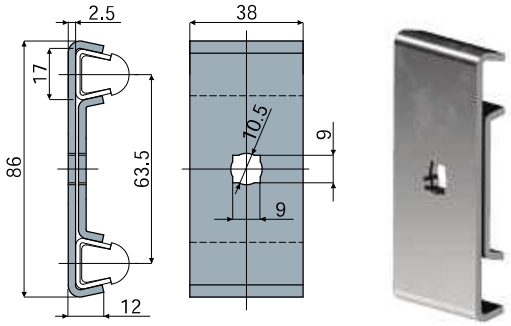

Code
410 / 84485

MATERIALS: Clamp made of stainless steel AISI 304.
FEATURES: With this item it is possible to use thickness 1,5 and 2 mm guides: Part.354, 377, 419, 418, 420, 353.
BOX QUANTITY: 24 pieces.
ON REQUEST:
- Box Quantity: According to your request.

Example of application

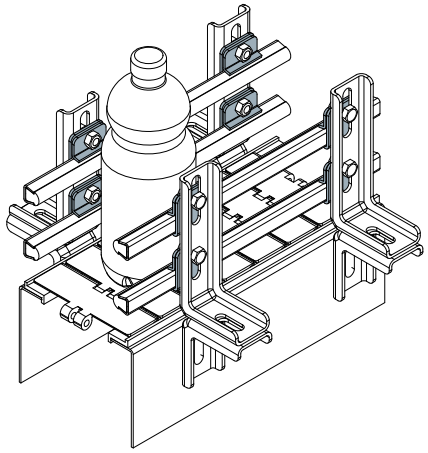

Guide rail clamp Part. 411

NEW

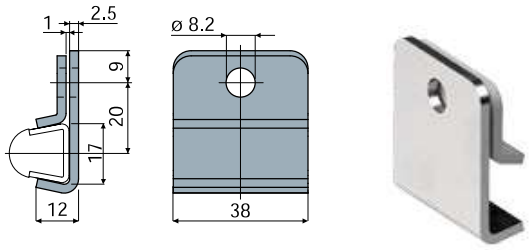

Code
411 / 84486

MATERIALS: Clamp made of stainless steel AISI 304.
FEATURES: With this item it is possible to use thickness 1,5 and 2 mm guides: Part.354, 377, 419, 418, 420, 353.
BOX QUANTITY: 24 pieces.
ON REQUEST:
- Box Quantity: According to your request.

Guide rail clamps

Part. 405 Guide rail clamp
(for round rails)

NEW

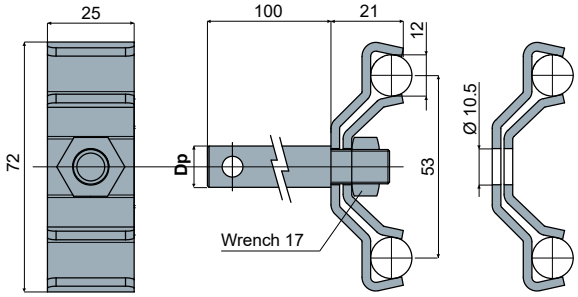

With pin Without pin

Dp Pin diameter	With pin	Without pin
(mm)	Code	Code
12	405 / 84327	
14	405 / 84442	405 / 85101
16	405 / 84443	

MATERIALS: Clamp, mounting plate, nut and threaded pin made of stainless steel AISI 304.
FEATURES: Supplied with or without pin.
BOX QUANTITY: 24 pieces.
ON REQUEST:
- Box Quantity: According to your request.
- Assembly of: Bolts and nuts.

Example of application

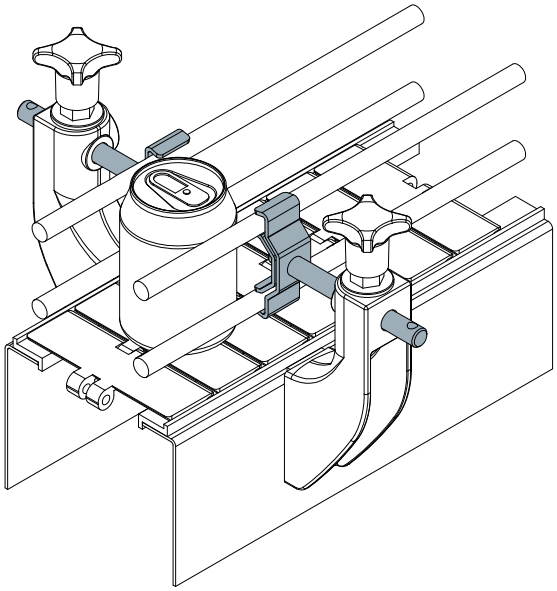

Part. 424 Guide rail clamp

NEW

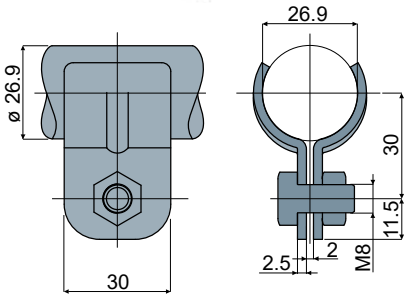

Code
424 / 84961

MATERIALS: Clamp, bolts and nuts in stainless steel AISI 304.
BOX QUANTITY: 24 pieces.
ON REQUEST:
- Box quantities: According to your request.
- Assembly of: Bolts and nuts.

Example of application

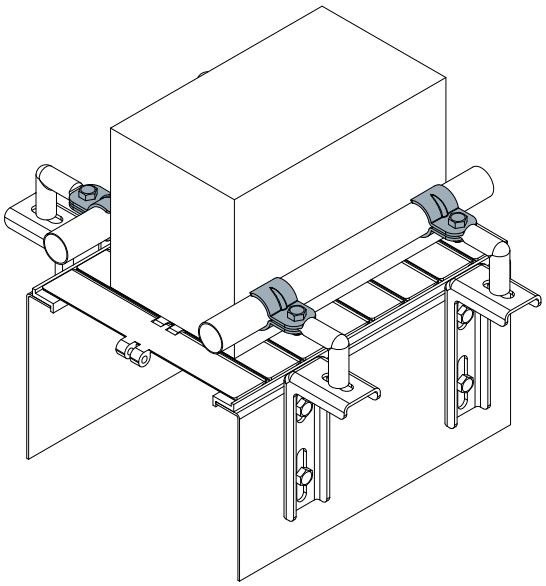

Guide rail clamps

Guide rail clamp

Part. **427**

NEW

Example of application

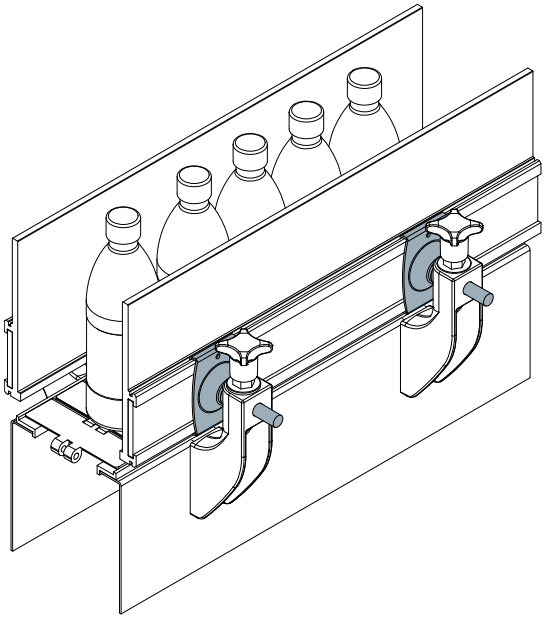

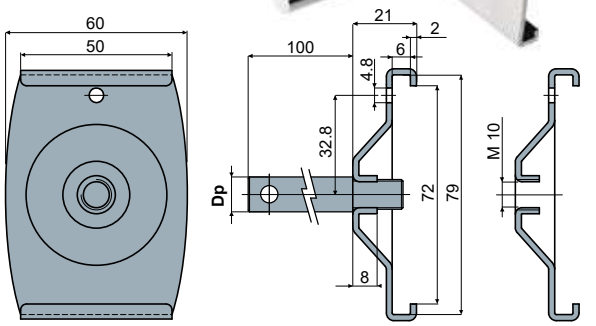

With pin | Without pin

Dp Pin diameter	With pin	Without pin
(mm)	Code	Code
12	427 / 85097	
14	427 / 85098	427 / 85009
16	427 / 85099	

MATERIALS: Clamp and pin in stainless steel AISI 304.
FEATURES: Supplied with or without pin. To be used with side guides part. 425, 426.
BOX QUANTITY: 24 pieces.
ON REQUEST:
- Assembling of: Pins.
- Box quantities: According to your request.

Guide rail clamp

Part. **434**

NEW

Example of application

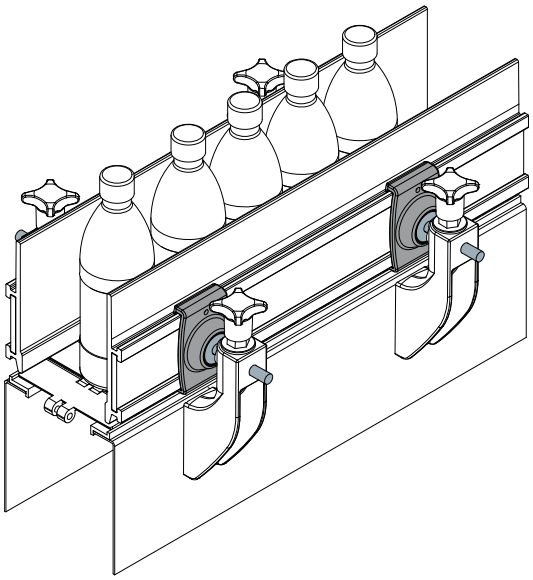

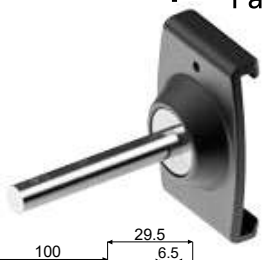

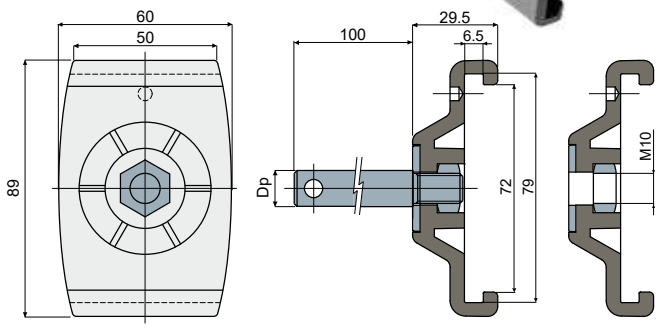

With pin | Without pin

Dp Pin diameter	With pin	Without pin
(mm)	Code	Code
12	434 / 85093	
14	434 / 85094	434 / 85100
16	434 / 85095	

MATERIALS: Clamp is made of reinforced polyamide; threaded pin, washer and nut in stainless steel AISI 304.
FEATURES: Supplied with or without pin. To be used with side guides part. 425, 426.
BOX QUANTITY: 8 pieces.
ON REQUEST:
- Assembling of: Pins, washers and nuts.
- Box quantities: According to your request.