ART. C196

SOLID CONTROL HANDWHEEL

MATERIAL:
Reinforced and stabilised polyamide.
Oils and greases resistant.

SURFACE:
Satin.

COLOUR:
Black (RAL 9011).

CENTRAL CAP:
Grey polyamide (RAL 7035 code 13).

ALTERNATIVE CAP COLOUR:
Orange (RAL 2004 cod. 02).
Blue (RAL 5015 cod. 07).
Yellow (RAL 1021 cod.10).
Red (RAL 3000 cod.16).
Green (RAL 6024 cod.17).
Black (RAL 9011 cod. 01).

MAIN INSERT:
Zinc plated steel right through bored bush with H7 tolerance.

For fixing systems, or execution of tabs or square holes, please refer to the technical notes attached to the catalogue.

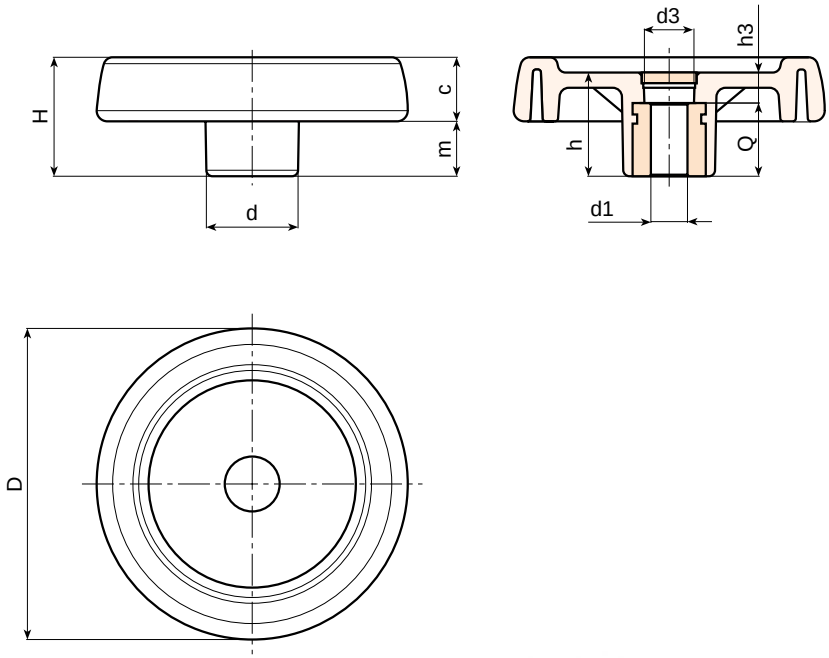

SPECIAL REQUESTS:

- It is possible to supply the inserts with d1 diameter by customer design, on request and for quantities.
- It is possible to supply the inserts in different materials, on request and for quantities.
- It is possible to supply the inserts with different treatment-finishes, on request and for quantities.
- It is possible to supply the complete handwheels with colours as shown in the table at page 11, on request and for quantities.

Art.	D	H	h	d	m	c	d3	h3	d1 H7	Q	dm	Weight (gr)
C196-80 D05	**81**	33	29	25	16	17	16	9	**5 H9**	20	12	100
C196-80 D10	**81**	33	29	25	16	17	16	9	**10**	20	12	100
C196-100 D05	**100**	39	34	30	18,5	20,5	16	10	**5 H9**	24	16	192
C196-100 D10	**100**	39	34	30	18,5	20,5	16	10	**10**	24	16	190
C196-125 D05	**125**	44	37	36	20	24	26	13	**5 H9**	24	18	295
C196-125 D12	**125**	44	37	36	20	24	26	13	**12**	24	18	290
C196-150 D05	**150**	54	44	38	25	29	26	12	**5 H9**	32	22	520
C196-150 D14	**150**	54	44	38	25	29	26	12	**14**	32	22	505
C196-175 D05	**173**	57	47	40	25,5	31,5	26	15	**5 H9**	32	22	660
C196-175 D16	**173**	57	47	40	25,5	31,5	26	15	**16**	32	22	650
C196-200 D05	**202**	59	49	44	24	35	27	13	**5 H9**	36	28	870
C196-200 D20	**202**	59	49	44	24	35	27	13	**20**	36	28	855
C196-250 D05	**249**	68	58	59	29	39	36	22	**5 H9**	36	28	1420
C196-250 D20	**249**	68	58	59	29	39	36	22	**20**	36	28	1400

It's possible to increase the hole, by boring, until **dm.**

ART. C198

SOLID CONTROL HANDWHEEL WITH REVOLVING FOLDING HANDLE

MATERIAL:
Reinforced and stabilised polyamide.
Oils and greases resistant.

SURFACE:
Satin.

HANDWHEEL AND HANDLE COLOUR:
Black (RAL 9011).

CENTRAL CAP:
Grey polyamide (RAL 7035 code 13).

ALTERNATIVE CAP COLOUR:
Orange (RAL 2004 cod. 02).
Blue (RAL 5015 cod. 07).
Yellow (RAL 1021 cod.10).
Red (RAL 3000 cod.16).
Green (RAL 6024 cod.17).
Black (RAL 9011 cod. 01).

MAIN INSERT:
Zinc plated steel right through bored bush with H7 tolerance.

SIDE INSERT:
Brass right through threaded bush.

SIDE HANDLE:
Revolving handle and folding Art. M136 (see chapter M on page 10).

For fixing systems, or execution of tabs or square holes, please refer to the technical notes attached to the catalogue.

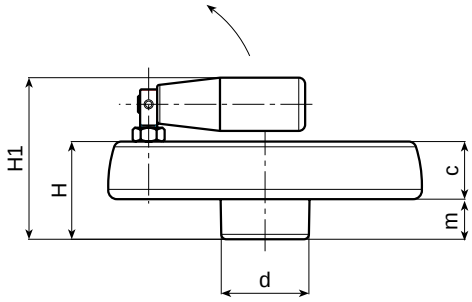

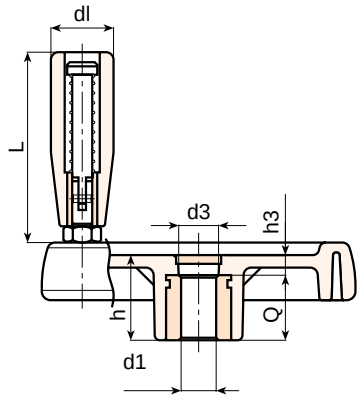

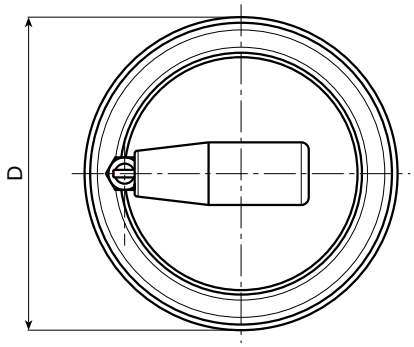

SPECIAL REQUESTS:

- It is possible to supply the inserts with d1 diameter by customer design, on request and for quantities.
- It is possible to supply the inserts in different materials, on request and for quantities.
- It is possible to supply the inserts with different treatment-finishes, on request and for quantities.
- It is possible to supply the complete handwheels with colours as shown in the table at page 11, on request and for quantities.

Art.	D	H	H1	h	d	m	c	d3	h3	d1 H7	Q	dm	dl	L	Weight (gr)
C198-80 D05	**81**	33	57	29	25	16	17	16	9	**5 H9**	20	12	20	56	145
C198-80 D10	**81**	33	57	29	25	16	17	16	9	**10**	20	12	20	56	142
C198-100 D05	**100**	39	63	34	30	18,5	20,5	16	10	**5 H9**	24	16	20	56	235
C198-100 D10	**100**	39	63	34	30	18,5	20,5	16	10	**10**	24	16	20	56	232
C198-125 D05	**125**	44	74	37	36	20	24	26	13	**5 H9**	24	18	25	76	360
C198-125 D12	**125**	44	74	37	36	20	24	26	13	**12**	24	18	25	76	355
C198-150 D05	**150**	54	89	44	38	25	29	26	12	**5 H9**	32	22	26	89	670
C198-150 D14	**150**	54	89	44	38	25	29	26	12	**14**	32	22	26	89	660
C198-175 D05	**173**	57	92	47	40	25,5	31,5	26	15	**5 H9**	32	22	26	97	810
C198-175 D16	**173**	57	92	47	40	25,5	31,5	26	15	**16**	32	22	26	97	800
C198-200 D05	**202**	59	94	49	44	24	35	27	13	**5 H9**	36	28	26	97	1030
C198-200 D20	**202**	59	94	49	44	24	35	27	13	**20**	36	28	26	97	1015
C198-250 D05	**249**	68	100	58	59	29	39	36	22	**5 H9**	36	28	26	97	1580
C198-250 D20	**249**	68	100	58	59	29	39	36	22	**20**	36	28	26	97	1567

It's possible to increase the hole, by boring, until **dm.**

ART. C197

SOLID CONTROL HANDWHEEL WITH REVOLVING HANDLE

MATERIAL:
Reinforced and stabilised polyamide.
Oils and greases resistant.

SURFACE:
Satin.

HANDWHEEL AND HANDLE COLOUR:
Black (RAL 9011).

CENTRAL CAP:
Grey polyamide (RAL 7035 code 13).

ALTERNATIVE CAP COLOUR:
Orange (RAL 2004 cod. 02).
Blue (RAL 5015 cod. 07).
Yellow (RAL 1021 cod.10).
Red (RAL 3000 cod.16).
Green (RAL 6024 cod.17).
Black (RAL 9011 cod. 01).

MAIN INSERT:
Zinc plated steel right through bored bush with H7 tolerance.

SIDE INSERT:
Brass right through threaded bush.

SIDE HANDLE:
Revolving handle Art. M144
(see chapter M on page 6).

For fixing systems, or execution of tabs square holes, please refer to the technical notes attached to the catalogue.

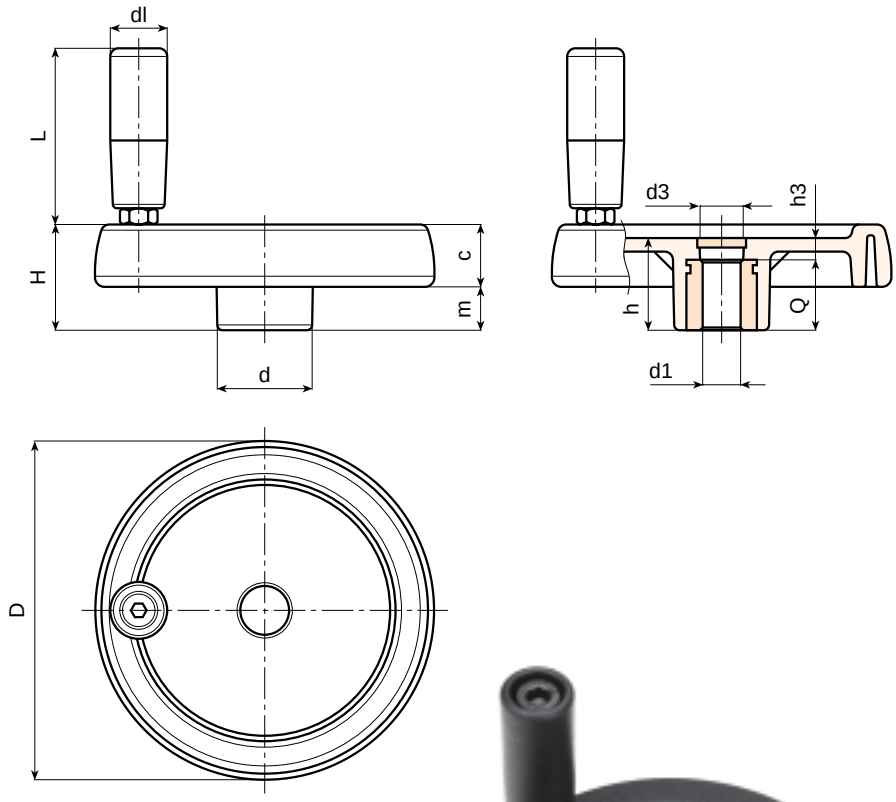

SPECIAL REQUESTS:

- It is possible to supply the inserts with d1 diameter by customer design, on request and for quantities.
- It is possible to supply the inserts in different materials, on request and for quantities.
- It is possible to supply the inserts with different treatment-finishes, on request and for quantities.
- It is possible to supply the complete handwheels with colours as shown in the table at page 11, on request and for quantities.

Art.	D	H	h	d	m	c	d3	h3	d1 H7	Q	dm	dl	L	Weight (gr)
C197-80 D05	**81**	33	29	25	16	17	16	9	**5 H9**	20	12	20	56	130
C197-80 D10	**81**	33	29	25	16	17	16	9	**10**	20	12	20	56	130
C197-100 D05	**100**	39	34	30	18,5	20,5	16	10	**5 H9**	24	16	20	56	192
C197-100 D10	**100**	39	34	30	18,5	20,5	16	10	**10**	24	16	20	56	190
C197-125 D05	**125**	44	37	36	20	24	26	13	**5 H9**	24	18	21	65	351
C197-125 D12	**125**	44	37	36	20	24	26	13	**12**	24	18	21	65	347
C197-150 D05	**150**	54	44	38	25	29	26	12	**5 H9**	32	22	23	76	588
C197-150 D14	**150**	54	44	38	25	29	26	12	**14**	32	22	23	76	573
C197-175 D05	**173**	57	47	40	25,5	31,5	26	15	**5 H9**	32	22	25	86	770
C197-175 D16	**173**	57	47	40	25,5	31,5	26	15	**16**	32	22	25	86	760
C197-200 D05	**202**	59	49	44	24	35	27	13	**5 H9**	36	28	25	86	980
C197-200 D20	**202**	59	49	44	24	35	27	13	**20**	36	28	25	86	965
C197-250 D05	**249**	68	58	59	29	39	36	22	**5 H9**	36	28	25	86	1530
C197-250 D20	**249**	68	58	59	29	39	36	22	**20**	36	28	25	86	1510

It's possible to increase the hole, by boring, until **dm.**

OPTIONS

ART. C193

SOLID CONTROL HANDWHEEL REVOLVING HANDLE M145

Art.	D	dl	L	Weight (gr)	OTHER VALUES
C193-80	**81**	20	55	135	see table C197
C193-100	**100**	20	55	220	see table C197
C193-125	**125**	23	66	370	see table C197
C193-150	**150**	25	76	594	see table C197
C193-175	**173**	25	87	750	see table C197
C193-200	**202**	27	96	965	see table C197
C193-250	**249**	27	96	1500	see table C197

SIDE HANDLE:
Revolving handle Art. M145 (see chapter M page 8).

For details of the handwheel see those for art. C197.

ART. C194

SOLID CONTROL HANDWHEEL WITH REVOLVING HANDLE M129

Art.	D	dl	L	Weight (gr)	OTHER VALUES
C194-80	**81**	20	52	145	see table C197
C194-100	**100**	20	52	235	see table C197
C194-125	**125**	23	62	350	see table C197
C194-150	**150**	25	72	610	see table C197
C194-175	**173**	25	81	755	see table C197
C194-200	**202**	27	93	975	see table C197
C194-250	**249**	27	93	1520	see table C197

SIDE HANDLE:
Revolving handle Art. M129 (see chapter M page 9).

For details of the handwheel see those for art. C197.

ART. C195

SOLID CONTROL HANDWHEEL WITH REVOLVING HANDLE "EUROMODEL"M202

Art.	D	dl	L	Weight (gr)	OTHER VALUES
C195-150	**150**	40	64	610	see table C197
C195-175	**173**	40	64	750	see table C197
C195-200	**202**	40	64	960	see table C197
C195-250	**249**	40	64	1490	see table C197

SIDE HANDLE:
Revolving handle Art. M202 (see chapter M page 18).

For details of the handwheel see those for art. C197.

STANDARD ART. C SERIES

BASE FOR SOLID CONTROL HANDWHEEL WITH PROVISION FOR HANDLE

Art.	D	d1	side handle threading	Weight (gr)	OTHER VALUES
C80	**81**	**5 H9**	M6	100	see table C197
C100	**100**	**5 H9**	M6	190	see table C197
C125	**125**	**5 H9**	M8	290	see table C197
C150	**150**	**5 H9**	M10	520	see table C197
C175	**173**	**5 H9**	M10	660	see table C197
C200	**202**	**5 H9**	M10	870	see table C197
C250	**249**	**5 H9**	M10	1400	see table C197

This article is recommended for distributors.

For details of the handwheel see those for art. C197.

ART. C199

SOLID CONTROL HANDWHEEL WITH FOLDAWAY REVOLVING HANDLE

MATERIAL:
Reinforced and stabilised polyamide.
Oils and greases resistant.

SURFACE:
Satin.

HANDWHEEL AND HANDLE COLOUR:
Black (RAL 9011).

CENTRAL CAP:
Grey polyamide (RAL 7035 code 13).

MAIN INSERT:
Zinc plated steel right through bored bush with H7 tolerance.

SIDE HANDLE:
Flush, foldaway revolving handle, with hexagonal connection. Reinforced polyamide handle. Black-oxide treated internal mechanism. Fixed with black-oxide treated hexagon socket button head screw ISO 7838.

For fixing systems, or execution of tabs or square holes, please refer to the technical notes attached to the catalogue.

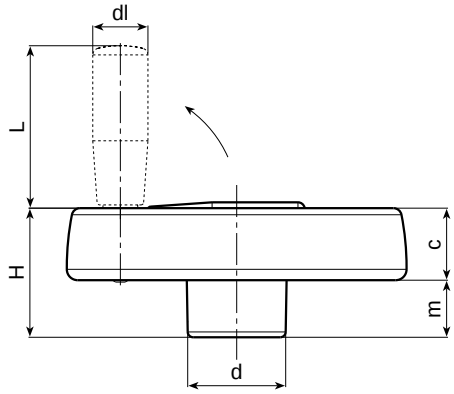

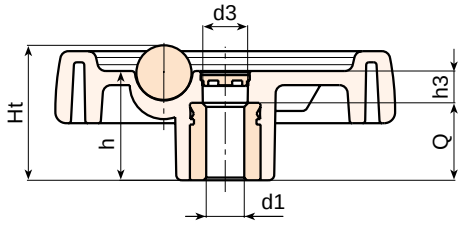

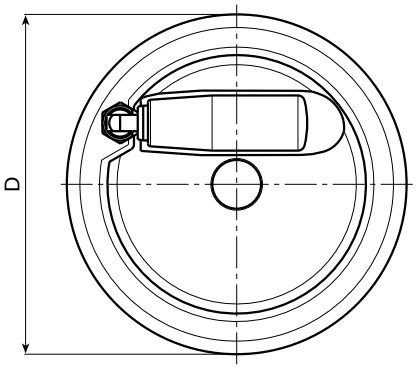

SPECIAL REQUESTS:

- It is possible to supply the inserts with d1 diameter by customer design, on request and for quantities.
- It is possible to supply the inserts in different materials, on request and for quantities.
- It is possible to supply the inserts with different treatment-finishes, on request and for quantities.
- It is possible to supply the complete handwheels with colours as shown in the table at page 11, on request and for quantities.

Art.	D	H	Ht	h	d	m	c	h3	d3	d1 H7	Q	dm	dl	L	Weight (gr)
C199-125 D05	**124**	48	49,5	40	36	21,5	26,5	16	15	**5 H9**	24	18	20	38	349
C199-125 D12	**124**	48	49,5	40	36	21,5	26,5	16	15	**12**	24	18	20	38	343
C199-150 D05	**149**	53	-	44	38	24,5	28,5	12	26	**5 H9**	32	22	20	58	500
C199-150 D14	**149**	53	-	44	38	24,5	28,5	12	26	**14**	32	22	20	58	492
C199-175 D05	**174**	58	-	48	40	24,5	33,5	16	26	**5 H9**	32	28	26	80	715
C199-175 D16	**174**	58	-	48	40	24,5	33,5	16	26	**16**	32	28	26	80	705
C199-200 D05	**198**	63	-	53	44	24,5	38,5	17	26	**5 H9**	36	28	27	90	1015
C199-200 D20	**198**	63	-	53	44	24,5	38,5	17	26	**20**	36	28	27	90	1000
C199-250 D05	**250**	67	-	58	60	29	38	22	36	**5 H9**	36	28	27	90	1500
C199-250 D20	**250**	67	-	58	60	29	38	22	36	**20**	36	28	27	90	1485

It's possible to increase the hole, by boring, until **dm.**

ART. C199

SOLID CONTROL HANDWHEEL WITH CENTRAL FOLDAWAY REVOLVING HANDLE

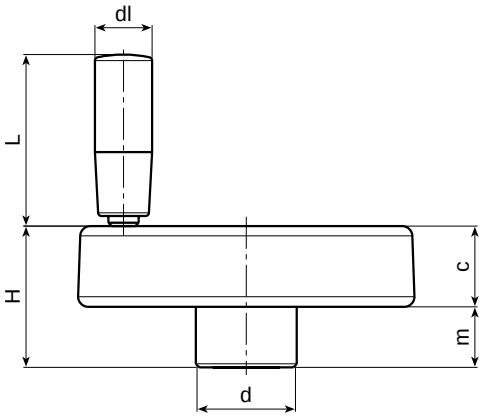

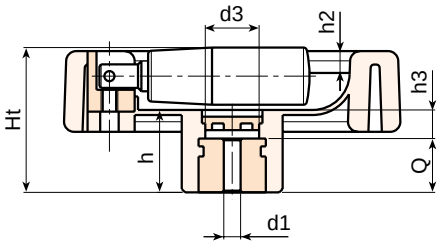

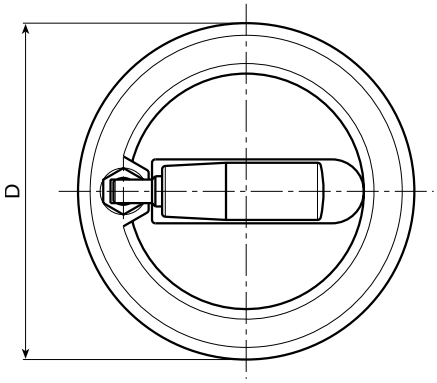

MATERIAL:
Reinforced and stabilised polyamide.
Oils and greases resistant.

SURFACE:
Satin.

HANDWHEEL AND HANDLE COLOUR:
Black (RAL 9011).

CENTRAL CAP:
Grey polyamide (RAL 7035 code 13).

MAIN INSERT:
Zinc plated steel right through bored bush with H7 tolerance.

SIDE HANDLE:
Flush, foldaway revolving handle, with hexagonal connection. Reinforced polyamide handle. Black-oxide treated internal mechanism. Fixed with black-oxide treated hexagon socket button head screw ISO 7838.

For fixing systems, or execution of tabs or square holes, please refer to the technical notes attached to the catalogue.

SPECIAL REQUESTS:

- It is possible to supply the inserts with d1 diameter by customer design, on request and for quantities.
- It is possible to supply the inserts in different materials, on request and for quantities.
- It is possible to supply the inserts with different treatment-finishes, on request and for quantities.
- It is possible to supply the complete handwheels with colours as shown in the table at page 11, on request 0and for quantities.

Art.	D	H	Ht	h	d	m	c	h2	h3	d3	d1 H7	Q	dm	dl	L	Weight (gr)
C199-80 D05	**80**	33	35	19	25	15	18	4	6	15	**5 H9**	13	12	16	38	113
C199-80 D10	**80**	33	35	19	25	15	18	4	6	15	**10**	13	12	16	38	110
C199-100 D05	**100**	42	43,5	24	30	18	24	6,5	8	17	**5 H9**	16	16	17	48	240
C199-100 D10	**100**	42	43,5	24	30	18	24	6,5	8	17	**10**	16	16	17	48	237

It's possible to increase the hole, by boring, until **dm.**

ART. C970

SOLID CONTROL HANDWHEEL WITH REVOLVING HANDLE AND LOCKING HANDWHEEL

MATERIAL:
Reinforced and stabilised polyamide.
Oils and greases resistant.

SURFACE:
Satin.

HANDWHEEL AND HANDLE COLOUR:
Black (RAL 9011).

CENTRAL CAP:
Grey polyamide (RAL 7035 code 13).

MAIN INSERT:
Zinc plated steel right through bored bush with H7 tolerance.

SIDE INSERT:
Brass right through threaded bush.

SIDE HANDLE:
Revolving handle Art. M144
(see chapter M on page 6).

LOCKING HANDWHEEL: Cylindrical handwheel G793-36 with threaded stud (see chapter G page 12). Black (RAL 9011).
Caution: the R and Q2 dimensions of the handwheel must be chosen by the customer according to the dimensions of the machinery on which it will be installed.

For fixing systems, or execution of tabs or square holes, please refer to the technical notes attached to the catalogue.

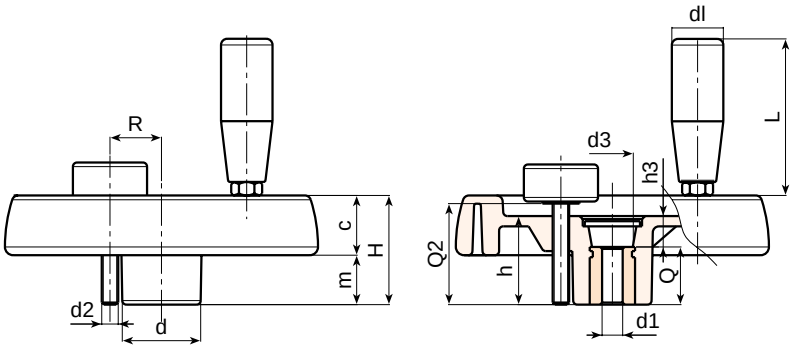

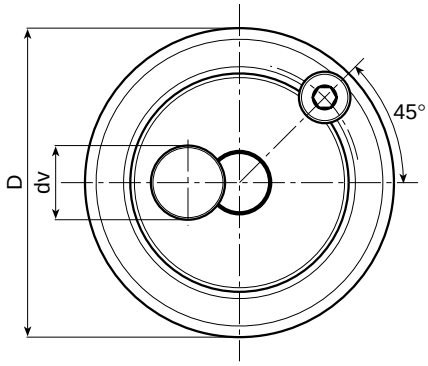

SPECIAL REQUESTS:

- It is possible to supply the inserts with d1 diameter by customer design, on request and for quantities.
- It is possible to supply the inserts in different materials, on request and for quantities.
- It is possible to supply the inserts with different treatment-finishes, on request and for quantities.
- It is possible to supply the complete handwheels with colours as shown in the table at page 11, on request and for quantities.

Art.	D	H	h	d	m	c	d3	h3	R	d2	Q2	d1 H7	Q	dm	dl	L	Weight (gr)
C970-100 D05	**100**	39	34	30	18,5	20,5	16	10	20	M6	A.R.	**5 H9**	24	16	20	56	252
C970-100 D10	**100**	39	34	30	18,5	20,5	16	10	20	M6	A.R.	**10**	24	16	20	56	250
C970-125 D05	**125**	44	37	36	20	24	26	13	22÷25	M6	A.R.	**5 H9**	24	18	21	65	410
C970-125 D12	**125**	44	37	36	20	24	26	13	22÷25	M6	A.R.	**12**	24	18	21	65	407
C970-150 D05	**150**	54	44	38	25	29	26	12	25÷28	M8	A.R.	**5 H9**	32	22	21	65	636
C970-150 D14	**150**	54	44	38	25	29	26	12	25÷28	M8	A.R.	**14**	32	22	21	65	625
C970-175 D05	**173**	57	47	40	25,5	31,5	26	15	26÷36	M8	A.R.	**5 H9**	32	22	23	76	812
C970-175 D16	**173**	57	47	40	25,5	31,5	26	15	26÷36	M8	A.R.	**16**	32	22	23	76	802
C970-200 D05	**202**	59	49	44	24	35	27	13	28÷42	M8	A.R.	**5 H9**	36	28	25	86	1040
C970-200 D20	**202**	59	49	44	24	35	27	13	28÷42	M8	A.R.	**20**	36	28	25	86	1025
C970-250 D05	**249**	68	58	59	29	39	36	22	36÷50	M8	A.R.	**5 H9**	36	28	25	86	1590
C970-250 D20	**249**	68	58	59	29	39	36	22	36÷50	M8	A.R.	**20**	36	28	25	86	1570

dv= 36 mm.
It's possible to increase the hole, by boring, until **dm.**
A.R.= Upon Request.

ART. C980

SOLID CONTROL HANDWHEEL WITH REVOLVING FOLDING HANDLE AND LOCKING HANDWHEEL

MATERIAL:
Reinforced and stabilised polyamide.
Oils and greases resistant.

SURFACE:
Satin.

HANDWHEEL AND HANDLE COLOUR:
Black (RAL 9011).

CENTRAL CAP:
Grey polyamide (RAL 7035 code 13).

MAIN INSERT:
Zinc plated steel right through bored bush with H7 tolerance.

SIDE INSERT:
Brass right through threaded bush.

SIDE HANDLE:
Revolving handle and folding Art. M136 (see chapter M on page 10).

LOCKING HANDWHEEL: Cylindrical handwheel G793-36 with threaded stud (see chapter G page 12). Black (RAL 9011).
Caution: the R and Q2 dimensions of the handwheel must be chosen by the customer according to the dimensions of the machinery on which it will be installed.

For fixing systems, or execution of tabs or square holes, please refer to the technical notes attached to the catalogue.

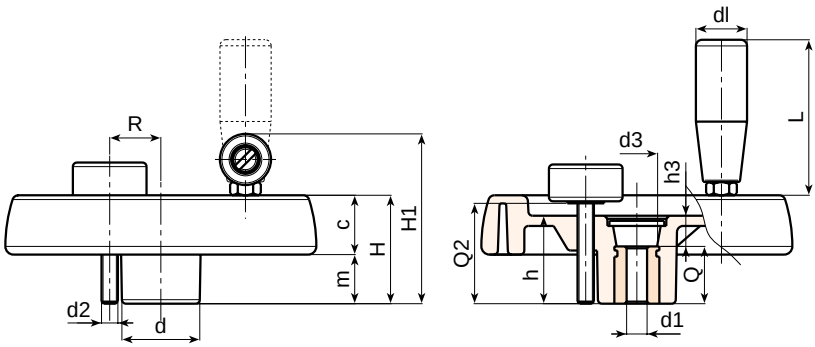

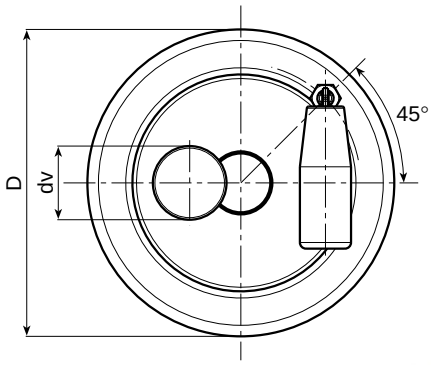

SPECIAL REQUESTS:

- It is possible to supply the inserts with d1 diameter by customer design, on request and for quantities.
- It is possible to supply the inserts in different materials, on request and for quantities.
- It is possible to supply the inserts with different treatment-finishes, on request and for quantities.
- It is possible to supply the complete handwheels with colours as shown in the table at page 11, on request and for quantities.

Art.	D	H	H1	h	d	m	c	d3	h3	R	d2	Q2	d1 H7	Q	dm	dl	L	Weight (gr)
C980-100 D05	**100**	39	63	34	30	18,5	20,5	16	10	20	M6	A.R.	**5 H9**	24	16	20	56	295
C980-100 D10	**100**	39	63	34	30	18,5	20,5	16	10	20	M6	A.R.	**10**	24	16	20	56	292
C980-125 D05	**125**	44	74	37	36	20	24	26	13	22÷25	M6	A.R.	**5 H9**	24	18	25	76	420
C980-125 D12	**125**	44	74	37	36	20	24	26	13	22÷25	M6	A.R.	**12**	24	18	25	76	415
C980-150 D05	**150**	54	89	44	38	25	29	26	12	25÷28	M8	A.R.	**5 H9**	32	22	26	89	730
C980-150 D14	**150**	54	89	44	38	25	29	26	12	25÷28	M8	A.R.	**14**	32	22	26	89	725
C980-175 D05	**173**	57	92	47	40	25,5	31,5	26	15	26÷36	M8	A.R.	**5 H9**	32	22	26	89	885
C980-175 D16	**173**	57	92	47	40	25,5	31,5	26	15	26÷36	M8	A.R.	**16**	32	22	26	89	875
C980-200 D05	**202**	59	94	49	44	24	35	27	13	28÷42	M8	A.R.	**5 H9**	36	28	26	97	1100
C980-200 D20	**202**	59	94	49	44	24	35	27	13	28÷42	M8	A.R.	**20**	36	28	26	97	1090
C980-250 D05	**249**	68	100	58	59	29	39	36	22	36÷50	M8	A.R.	**5 H9**	36	28	26	97	1640
C980-250 D20	**249**	68	100	58	59	29	39	36	22	36÷50	M8	A.R.	**20**	36	28	26	97	1627

dv= 36 mm.
It's possible to increase the hole, by boring, until **dm.**
A.R.= Upon Request.

ART. C990

SOLID CONTROL HANDWHEEL WITH FOLDAWAY REVOLVING HANDLE AND LOCKING HANDWHEEL

MATERIAL:
Reinforced and stabilised polyamide.
Oils and greases resistant.

SURFACE:
Satin.

HANDWHEEL AND HANDLE COLOUR:
Black (RAL 9011).

CENTRAL CAP:
Grey polyamide (RAL 7035 code 13).

MAIN INSERT:
Zinc plated steel right through bored bush with H7 tolerance.

SIDE HANDLE:
Flush, foldaway revolving handle, with hexagonal connection. Reinforced polyamide handle. Black-oxide treated internal mechanism. Fixed with black-oxide treated hexagon socket button head screw ISO 7838.

LOCKING HANDWHEEL: Cylindrical handwheel G793-36 with threaded stud (see chapter G page 12). Black (RAL 9011).
Caution: the R and Q2 dimensions of the handwheel must be chosen by the customer according to the dimensions of the machinery on which it will be installed.

For fixing systems, or execution of tabs or square holes, please refer to the technical notes attached to the catalogue.

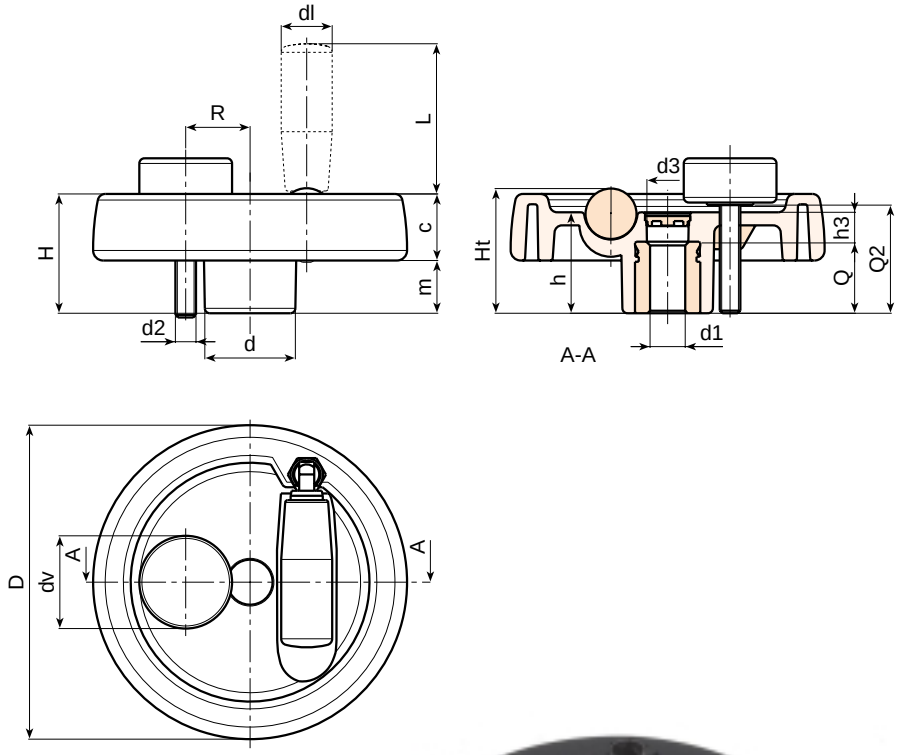

SPECIAL REQUESTS:

- It is possible to supply the inserts with d1 diameter by customer design, on request and for quantities.
- It is possible to supply the inserts in different materials, on request and for quantities.
- It is possible to supply the inserts with different treatment-finishes, on request and for quantities.
- It is possible to supply the complete handwheels with colours as shown in the table at page 11, on request and for quantities.

Art.	D	H	Ht	h	d	m	c	h3	d3	R	d2	Q2	d1 H7	Q	dm	dl	L	Weight (gr)
C990-125 D05	**124**	48	49,5	40	36	21,5	26,5	16	15	22÷25	M6	A.R.	**5 H9**	24	18	20	38	410
C990-125 D12	**124**	48	49,5	40	36	21,5	26,5	16	15	22÷25	M6	A.R.	**12**	24	18	20	38	408
C990-150 D05	**149**	53	-	44	38	24,5	28,5	12	26	25÷28	M8	A.R.	**5 H9**	32	22	20	58	560
C990-150 D14	**149**	53	-	44	38	24,5	28,5	12	26	25÷28	M8	A.R.	**14**	32	22	20	58	592
C990-175 D05	**174**	58	-	48	40	24,5	33,5	16	26	26÷36	M8	A.R.	**5 H9**	32	28	26	80	775
C990-175 D16	**174**	58	-	48	40	24,5	33,5	16	26	26÷36	M8	A.R.	**16**	32	28	26	80	765
C990-200 D05	**198**	63	-	53	44	24,5	38,5	17	26	28÷42	M8	A.R.	**5 H9**	36	28	27	90	1075
C990-200 D20	**198**	63	-	53	44	24,5	38,5	17	26	28÷42	M8	A.R.	**20**	36	28	27	90	1060
C990-250 D05	**250**	67	-	58	60	29	38	22	36	36÷50	M8	A.R.	**5 H9**	36	28	27	90	1560
C990-250 D20	**250**	67	-	58	60	29	38	22	36	36÷50	M8	A.R.	**20**	36	28	27	90	1545

dv= 36 mm.
It's possible to increase the hole, by boring, until **dm.**
A.R.= Upon Request.

Colour Chart

RAL

Colour		RAL	Code
Black		9011	01
Orange		2004	02
Orange		2011	03
White		9010	04
Blue		5002	05
Blue		5005	06
Blue		5015	07
Blue		5018	19
Blue		5019	21
Blue		5010	22
Yellow		1007	09
Yellow		1021	10
Grey		7024	12
Grey		7035	13
Red		3000	16
Green		6024	17

Other Colours

Colour		Ref.	Code
White		-	52
Blue		-	53
Blue		pant. 645 U	54
Blue		pant. 300	55
Grey		-	57
Grey		-	59
Grey		NCS 7500	60
Red		-	64
Red		-	65
Natural		-	66
Green		-	70
Brown		-	71
Cream		-	72
Violet		-	73

ART. D205

TWO SPOKE CONTROL HANDWHEEL

MATERIAL:
Reinforced and stabilised polyamide.
Oils and greases resistant.

SURFACE:
Satin.

HANDWHEEL COLOUR:
Black (RAL 9011).

CENTRAL CAP:
Grey polyamide (RAL 7035 code 13).

ALTERNATIVE CAP COLOUR:
Orange (RAL 2004 code 02).
Blue (RAL 5015 code 07).
Yellow (RAL 1021 code 10).
Red (RAL 3000 code 16).
Green (RAL 6024 code 17).
Black (RAL 9011 code 01).

MAIN INSERT:
Zinc plated steel right through bored bush with H7 tolerance.

HUB:
Solid hub.
(*) Hollow underneath hub.

For fixing systems, or execution of tabs or square holes, please refer to the technical notes attached to the catalogue.

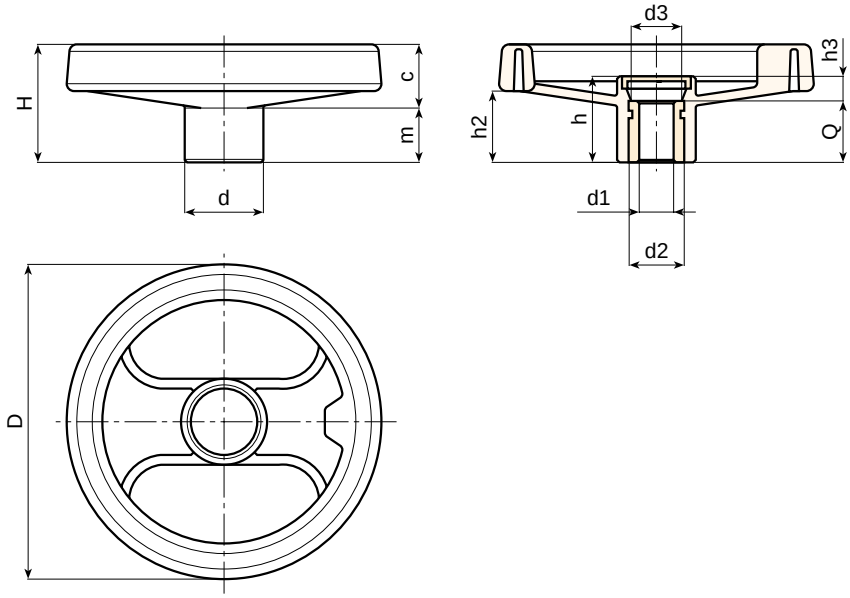

SPECIAL REQUESTS:

- It is possible to supply the inserts with d1 diameter by customer design, on request and for quantities.
- It is possible to supply the inserts with threaded d1 diameter, on request and for quantities.
- It is possible to supply the inserts in different materials, on request and for quantities.
- It is possible to supply the inserts with different treatment-finishes, on request and for quantities.
- It is possible to supply the complete handwheels with colours as shown in the table at page 19, on request and for quantities.

Art.	D	H	h	d	m	c	h2	h3	d3	d1 H7	Q	dm	Weight (gr)
D205-80 D05	**80**	34	26	24,5	16	18	20	6	16	**5 H9**	20	12	94
D205-80 D10	**80**	34	26	24,5	16	18	20	6	16	**10**	20	12	92
D205-100 D05	**99**	43	33	28	20	23	26,5	9	16	**5 H9**	24	16	152
D205-100 D10	**99**	43	33	28	20	23	26,5	9	16	**10**	24	16	150
D205-130 D05	**129**	50	36	32	21	29	32	12	26	**5 H9**	24	18	240
D205-130 D12	**129**	50	36	32	21	29	32	12	26	**12**	24	18	237
D205-160 D05	**159**	57	40,5	40	22	35	34	8,5	26	**5 H9**	32	22	390
D205-160 D14	**159**	57	40,5	40	22	35	34	8,5	26	**14**	32	22	385
D205-200 D05	**198**	61,5	39,5	51	17,5	44	33	7,5	26	(*) **5 H9**	32	22	630
D205-200 D16	**198**	61,5	39,5	51	17,5	44	33	7,5	26	(*) **16**	32	22	624
D205-250 D05	**252**	70	47	55,5	24	46	39	11	24	(*) **5 H9**	36	28	920
D205-250 D20	**252**	70	47	55,5	24	46	39	11	24	(*) **20**	36	28	910
D205-350 D05	**346**	80	49,5	67,5	24	56	43,5	17,5	35	(*) **5 H9**	32	30	1530
D205-350 D20	**346**	80	49,5	67,5	24	56	43,5	17,5	35	(*) **20**	32	30	1520

It's possible to increase the hole, by boring, until **dm.**

ART. D206

TWO SPOKE CONTROL HANDWHEEL WITH REVOLVING HANDLE

MATERIAL:
Reinforced and stabilised polyamide.
Oils and greases resistant.

SURFACE:
Satin.

HANDWHEEL AND HANDLE COLOUR:
Black (RAL 9011).

CENTRAL CAP:
Grey polyamide (RAL 7035 code 13).

ALTERNATIVE CAP COLOUR:
Orange (RAL 2004 code 02).
Blue (RAL 5015 code 07).
Yellow (RAL 1021 code 10).
Red (RAL 3000 code 16).
Green (RAL 6024 code 17).
Black (RAL 9011 code 01).

MAIN INSERT:
Zinc plated steel right through bored bush with H7 tolerance.

SIDE INSERT:
Brass right through threaded bush.
(+) Black-oxide treated steel insert with hexagonal threaded through hole. Fixed with black-oxide treated hexagon socket button head screw ISO 7838.

SIDE HANDLE:
Revolving handle Art. M144 (see chapter M on page 6).

HUB:
Solid hub. (*) Hollow underneath hub.

For fixing systems, or execution of tabs or square holes, please refer to the technical notes attached to the catalogue.

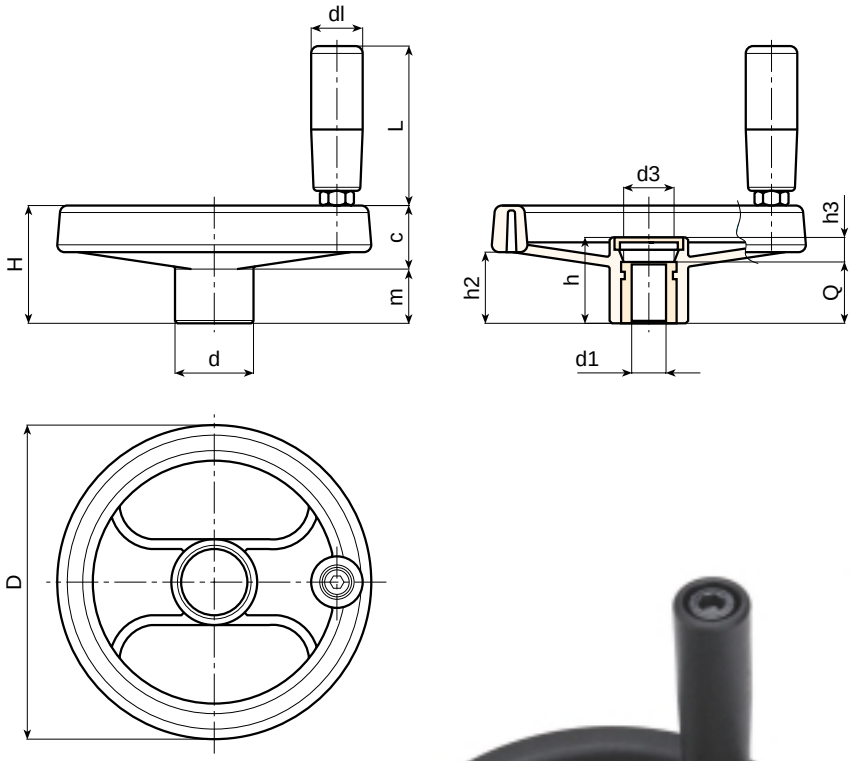

SPECIAL REQUESTS:

- It is possible to supply the inserts with d1 diameter by customer design, on request and for quantities.
- It is possible to supply the inserts with threaded d1 diameter, on request and for quantities.
- It is possible to supply the inserts in different materials, on request and for quantities.
- It is possible to supply the inserts with different treatment-finishes, on request and for quantities.
- It is possible to supply the complete handwheels with colours as shown in the table at page 19, on request and for quantities.

Art.	D	H	h	d	m	c	h2	h3	d3	d1 H7	Q	dm	dl	L	Weight (gr)
D206-80 D05	**80**	34	26	24,5	16	18	20	6	16	**5 H9**	20	12	20	56	125
D206-80 D10	**80**	34	26	24,5	16	18	20	6	16	**10**	20	12	20	56	124
D206-100 D05	**99**	43	33	28	20	23	26,5	9	16	**5 H9**	24	16	20	56	182
D206-100 D10	**99**	43	33	28	20	23	26,5	9	16	**10**	24	16	20	56	180
D206-130 D05	**129**	50	36	32	21	29	32	12	26	**5 H9**	24	18	21	65	296
D206-130 D12	**129**	50	36	32	21	29	32	12	26	**12**	24	18	21	65	293
D206-160 D05	**159**	57	40,5	40	22	35	34	8,5	26	**5 H9**	32	22	23	76	458
D206-160 D14	**159**	57	40,5	40	22	35	34	8,5	26	**14**	32	22	23	76	453
D206-200 D05	**198**	61,5	39,5	51	17,5	44	33	7,5	26	(*) **5 H9**	32	22	23	76	700
D206-200 D16	**198**	61,5	39,5	51	17,5	44	33	7,5	26	(*) **16**	32	22	23	76	692
D206-250 D05	**252**	70	47	55,5	24	46	39	11	24	(*) **5 H9**	36	28	25	86	1030
D206-250 D20	**252**	70	47	55,5	24	46	39	11	24	(*) **20**	36	28	25	86	1020
D206-350 D05	**346**	80	49,5	67,5	24	56	43,5	17,5	35	(*)(+) **5 H9**	32	30	25	86	1640
D206-350 D20	**346**	80	49,5	67,5	24	56	43,5	17,5	35	(*)(+) **20**	32	30	25	86	1630

It's possible to increase the hole, by boring, until **dm.**

OPTIONS

ART. D209

ART. D210

ART. D211

STANDARD ART. D SERIES

ART. D209

TWO SPOKE CONTROL HANDWHEEL WITH REVOLVING HANDLE M145

Art.	D	dl	L	Weight (gr)	OTHER VALUES
D209-80	**80**	20	55	126	see table D206
D209-100	**99**	20	55	185	see table D206
D209-130	**129**	23	66	314	see table D206
D209-160	**159**	25	76	467	see table D206
D209-200	**198**	25	76	712	see table D206
D209-250	**252**	25	87	1010	see table D206
D209-350	**346**	25	87	1620	see table D206

SIDE HANDLE:
Revolving Handle Art. M145 (see chapter M page 8).

For details of the handwheel see those for art. D206.

ART. D210

TWO SPOKE CONTROL HANDWHEEL WITH REVOLVING HANDLE M129

Art.	D	dl	L	Weight (gr)	OTHER VALUES
D210-80	**80**	20	56	145	see table D206
D210-100	**99**	20	56	235	see table D206
D210-130	**129**	21	65	350	see table D206
D210-160	**159**	21	76	610	see table D206
D210-200	**198**	25	76	755	see table D206
D210-250	**252**	25	87	975	see table D206
D210-350	**346**	25	87	1630	see table D206

SIDE HANDLE:
Revolving Handle Art. M129 (see chapter M page 9).

For details of the handwheel see those for art. D206.

ART. D211

TWO SPOKE CONTROL HANDWHEEL WITH REVOLVING HANDLE "EUROMODEL"M202

Art.	D	dl	L	Weight (gr)	OTHER VALUES
D211-250	**252**	40	64	1000	see table D206
D211-350	**346**	40	64	1600	see table D206

SIDE HANDLE:
Revolving Handle Art. M202 (see chapter M page 18).

For details of the handwheel see those for art. D206.

STANDARD ART. D SERIES

BASE FOR TWO SPOKE CONTROL HANDWHEEL WITH PROVISION FOR HANDLE

Art.	D	d1	side handle threading	Weight (gr)	OTHER VALUES
D80	**80**	**5 H9**	M6	95	see table D206
D100	**99**	**5 H9**	M6	150	see table D206
D130	**129**	**5 H9**	M8	240	see table D206
D160	**159**	**5 H9**	M8	390	see table D206
D200	**198**	**5 H9**	M8	640	see table D206
D250	**252**	**5 H9**	M10	910	see table D206
D350	**346**	**5 H9**	M10	1530	see table D206

This article is recommended for distributors.

For details of the handwheel see those for art. D206.

ART. D208

TWO SPOKE CONTROL HANDWHEEL WITH REVOLVING FOLDING HANDLE

MATERIAL:
Reinforced and stabilised polyamide.
Oils and greases resistant.

SURFACE:
Satin.

HANDWHEEL AND HANDLE COLOUR:
Black (RAL 9011).

CENTRAL CAP:
Grey polyamide (RAL 7035 code 13).

ALTERNATIVE CAP COLOUR:
Orange (RAL 2004 code 02).
Blue (RAL 5015 code 07).
Yellow (RAL 1021 code 10).
Red (RAL 3000 code 16).
Green (RAL 6024 code 17).
Black (RAL 9011 code 01).

MAIN INSERT:
Zinc plated steel right through bored bush with H7 tolerance.

SIDE INSERT:
Brass right through threaded bush.
(+) Black-oxide treated steel insert with hexagonal threaded through hole. Fixed with black-oxide treated hexagon socket button head screw ISO 7838.

SIDE HANDLE:
Revolving handle and folding Art. M136 (see chapter M on page 10).

HUB:
Solid hub. (*) Hollow underneath hub.

For fixing systems, or execution of tabs or square holes, please refer to the technical notes attached to the catalogue.

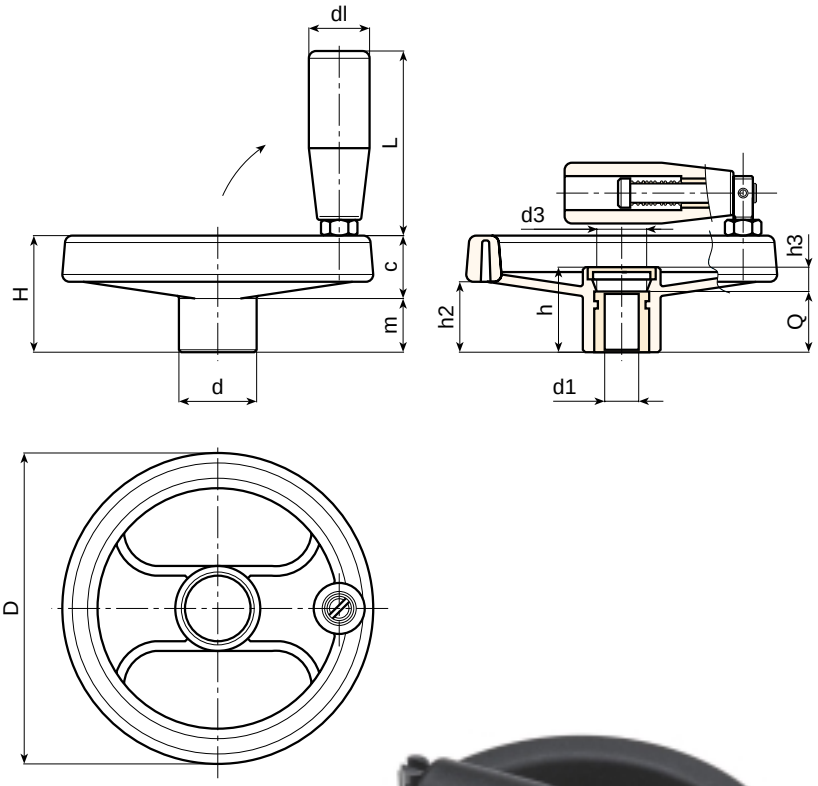

SPECIAL REQUESTS:

- It is possible to supply the inserts with d1 diameter by customer design, on request and for quantities.
- It is possible to supply the inserts with threaded d1 diameter, on request and for quantities.
- It is possible to supply the inserts in different materials, on request and for quantities.
- It is possible to supply the inserts with different treatment-finishes, on request and for quantities.
- It is possible to supply the complete handwheels with colours as shown in the table at page 19, on request and for quantities.

Art.	D	H	h	d	m	c	h2	h3	d3	d1 H7	Q	dm	dl	L	Weight (gr)
D208-80 D05	**80**	34	26	24,5	16	18	20	6	16	**5 H9**	20	12	20	56	135
D208-80 D10	**80**	34	26	24,5	16	18	20	6	16	**10**	20	12	20	56	134
D208-100 D05	**99**	43	33	28	20	23	26,5	9	16	**5 H9**	24	16	20	56	192
D208-100 D10	**99**	43	33	28	20	23	26,5	9	16	**10**	24	16	20	56	190
D208-130 D05	**129**	50	36	32	21	29	32	12	26	**5 H9**	24	18	25	76	311
D208-130 D12	**129**	50	36	32	21	29	32	12	26	**12**	24	18	25	76	308
D208-160 D05	**159**	57	40,5	40	22	35	34	8,5	26	**5 H9**	32	22	25	76	460
D208-160 D14	**159**	57	40,5	40	22	35	34	8,5	26	**14**	32	22	25	76	455
D208-200 D05	**198**	61,5	39,5	51	17,5	44	33	7,5	26	(*) **5 H9**	32	22	25	76	704
D208-200 D16	**198**	61,5	39,5	51	17,5	44	33	7,5	26	(*) **16**	32	22	25	76	676
D208-250 D05	**252**	70	47	55,5	24	46	39	11	24	(*) **5 H9**	36	28	26	97	1080
D208-250 D20	**252**	70	47	55,5	24	46	39	11	24	(*) **20**	36	28	26	97	1070
D208-350 D05	**346**	80	49,5	67,5	24	56	43,5	17,5	35	(*)(+) **5 H9**	32	30	26	97	1690
D208-350 D20	**346**	80	49,5	67,5	24	56	43,5	17,5	35	(*)(+) **20**	32	30	26	97	1680

It's possible to increase the hole, by boring, until **dm.**

ART. D207

TWO SPOKE CONTROL HANDWHEEL WITH FOLDAWAY REVOLVING HANDLE

MATERIAL:
Reinforced and stabilised polyamide.
Oils and greases resistant.

SURFACE:
Satin.

HANDWHEEL AND HANDLE COLOUR:
Black (RAL 9011).

CENTRAL CAP:
Grey polyamide (RAL 7035 code 13).

ALTERNATIVE CAP COLOUR:
Orange (RAL 2004 code 02).
Blue (RAL 5015 code 07).
Yellow (RAL 1021 code 10).
Red (RAL 3000 code 16).
Green (RAL 6024 code 17).
Black (RAL 9011 code 01).

MAIN INSERT:
Zinc plated steel right through bored bush with H7 tolerance.

SIDE HANDLE:
Flush, foldaway revolving handle, with hexagonal connection. Reinforced polyamide. Black-oxide treated internal mechanism. Fixed with black-oxide treated hexagon socket button head screw ISO 7838.

HUB:
Solid hub.

For fixing systems, or execution of tabs or square holes, please refer to the technical notes attached to the catalogue.

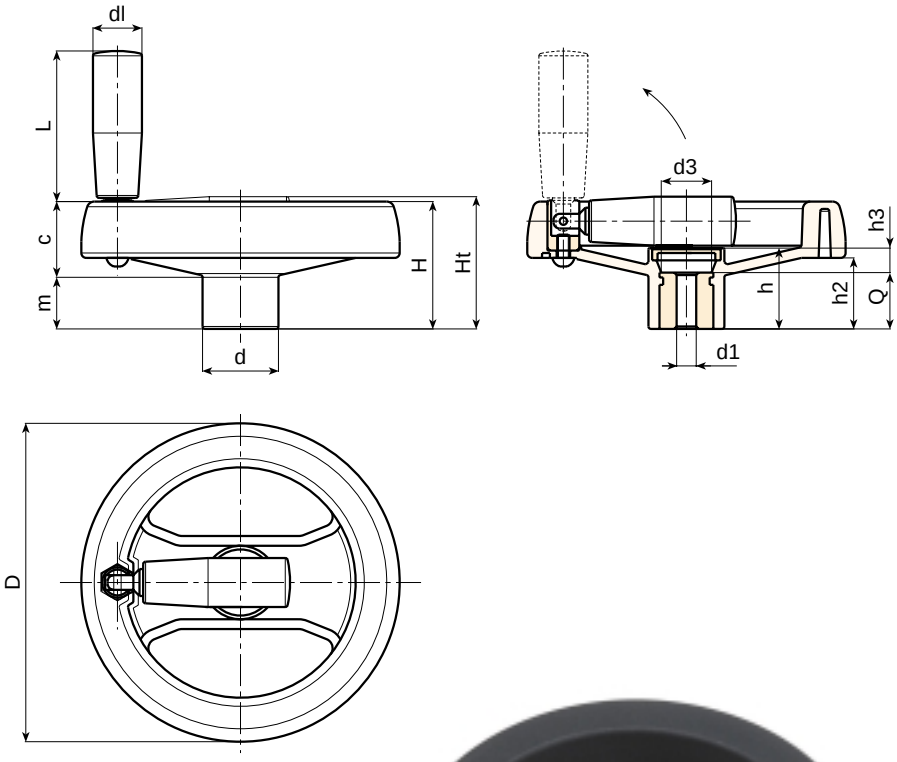

SPECIAL REQUESTS:

- It is possible to supply the inserts with d1 diameter by customer design, on request and for quantities.
- It is possible to supply the inserts with threaded d1 diameter, on request and for quantities.
- It is possible to supply the inserts in different materials, on request and for quantities.
- It is possible to supply the inserts with different treatment-finishes, on request and for quantities.
- It is possible to supply the complete handwheels with colours as shown in the table at page 19, on request and for quantities.

Art.	D	H	Ht	h	d	m	c	h2	h3	d3	d1 H7	Q	dm	dl	L	Weight (gr)
D207-130 D05	**129**	53	55	32	32	22	31	30	12	26	**5 H9**	20	18	20	58	300
D207-130 D12	**129**	53	55	32	32	22	31	30	12	26	**12**	20	18	20	58	297
D207-160 D05	**159**	55	59	33,5	40	20,5	34,5	31	9,5	26	**5 H9**	24	22	25	71	450
D207-160 D14	**159**	55	59	33,5	40	20,5	34,5	31	9,5	26	**14**	24	22	25	71	445
D207-350 D05	**346**	80	86	49,5	67,5	24	56	43,5	17,5	35	**5 H9**	32	30	40	64	1650
D207-350 D20	**346**	80	86	49,5	67,5	24	56	43,5	17,5	35	**20**	32	30	40	64	1640

It's possible to increase the hole, by boring, until **dm.**

ART. D601

TWO-SPOKE CONTROL HANDWHEEL WITH REVOLVING FOLDING HANDLE AND LOCKING PISTON

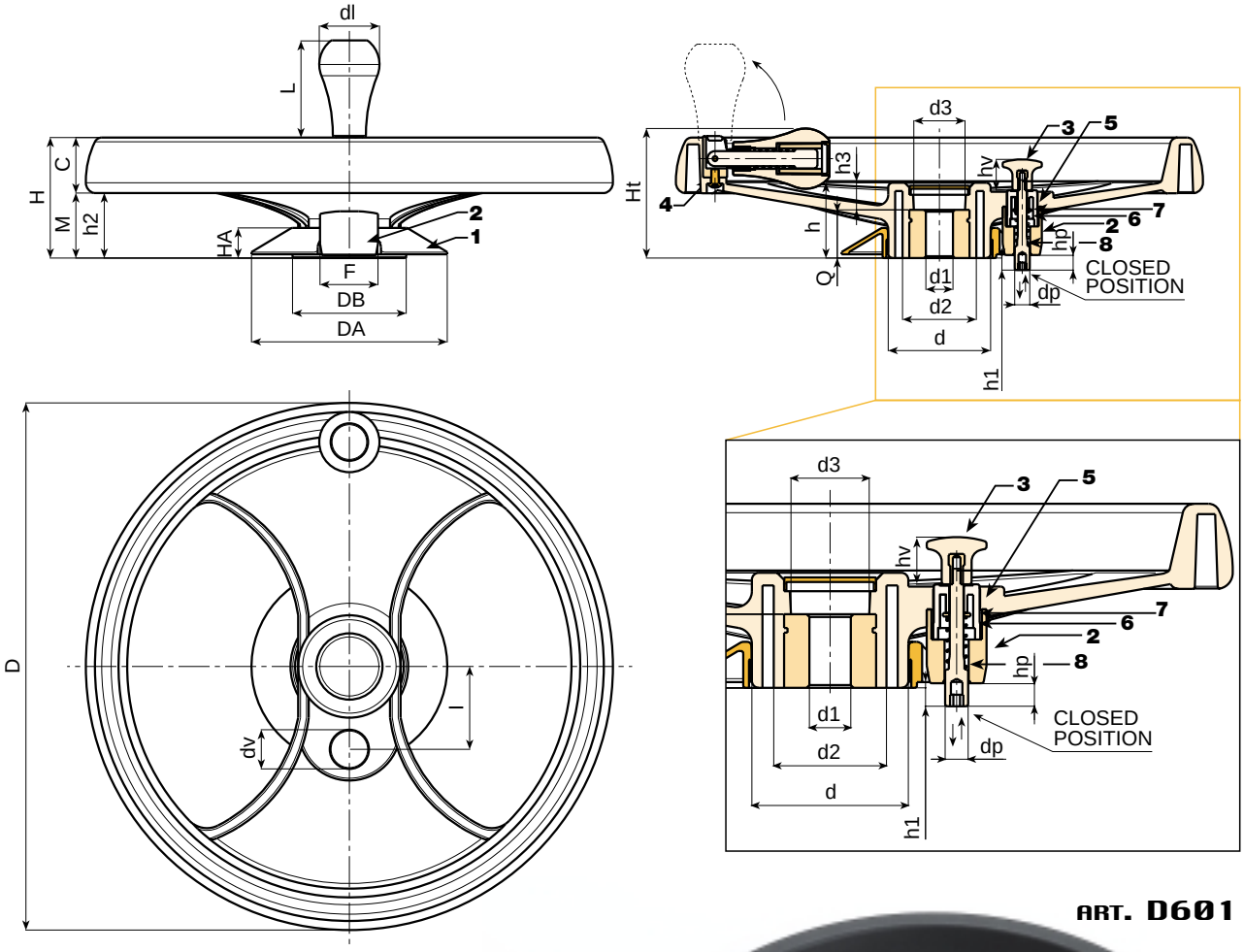

ART. D601

This type of product is an evolution of our traditional handwheel D207-350. By simply adding a special assembly kit this product can be adapted for use in a special market sector: that of compact shelving (sliding storage systems on rails). This handgrip is suitable for handling shelving on rails. A locking device or piston is used to lock, stop, position the shelving units in specific positions.

Art.	D	H	Ht	h	d	M	C	h2	h3	d2	d3	Q	dm	dl	L	Weight (gr)
D601-350	**346**	80	86	49,5	67,5	24	56	43,5	17,5	49	35	32	30	40	64	1800

Art.	I	dv	hv	h1	dp	hp	DA	HA	DB	F
D601-350	55	26	21	8	10	10	131	20	76	38

d1 = On request.

It's possible to increase the hole, by boring, until **dm.**

ART. D602

TWO-SPOKE CONTROL HANDWHEEL WITH REVOLVING FOLDING HANDLE AND LOCKING PISTON

MATERIAL:
Reinforced and stabilised polyamide.
Oils and greases resistant.

SURFACE:
Satin.

COMPLETE HANDWHEEL COLOUR:
Black (RAL 9011).

CENTRAL CAP:
Grey polyamide (RAL 7035 code 13).

ALTERNATIVE CAP COLOUR:
Orange (RAL 2004 code 02).
Blue (RAL 5015 code 07).
Yellow (RAL 1021 code 10).
Red (RAL 3000 code 16).
Green (RAL 6024 code 17).
Black (RAL 9011 code 01).

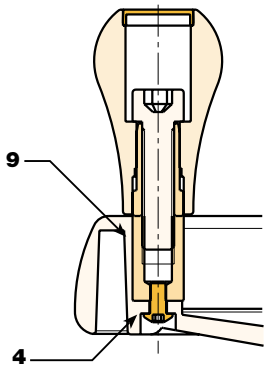

LOCKING PISTON KIT:
(1) PA6+GF hole cover ring. Black (RAL 9011). Push-fit assembly. Removable.
(2) PA6+GF piston holder. Black (RAL 9011). Assembly by means of two self-tapping, galvanised steel screws, screwdriver head 3.5x30.
(3) PA6+GF gear stick d. 26 with M4 brass female threaded insert and positioning brackets. Black (RAL 9011).
(5) PA6+GF gear stick support with positioner. Black (RAL 9011).
(6) Galvanised steel return spring.
(7) Galvanised steel washer.
(8) Galvanised steel locking piston. Seat for Allen wrench no. 5 for fastening. Piston stroke 10 mm. Useful projection from handwheel 8 mm.

Locking piston kit

INSERTS:
(1) Customised galvanised steel through-hole insert.
(4) Black-oxide treated hexagon socket button head screw ISO 7838 for fastening handle.
(9) (art. D602) Black-oxide treated steel insert with hexagonal threaded through-hole.

SIDE HANDLE:
(art. D601) Flush, foldaway revolving handle, with hexagonal connection. Made from reinforced polyamide (shape same as art. M202). Black-oxide treated internal mechanism. Fixing by means of black-oxide treated hexagon socket button head screw ISO 7838. Grey polyamide push fit cap (RAL 7035 code 13).

(art. D602) Revolving handle Art. M202 (see Chapter M on page 18).

For fixing systems, or execution of tabs or square holes, please refer to the technical notes attached to the catalogue.

ART. D602

SPECIAL REQUESTS:

- It is possible to supply the inserts in different materials, on request and for quantities.
- It is possible to supply the inserts with different treatment-finishes, on request and for quantities.

Art.	D	H	Ht	h	d	M	C	h2	h3	d2	d3	Q	dm	dl	L	Weight (gr)
D602-350	**346**	80	86	49,5	67,5	24	56	43,5	17,5	49	35	32	30	40	64	1800

Art.	I	dv	hv	h1	dp	hp	DA	HA	DB	F
D602-350	55	26	21	8	10	10	131	20	76	38

d1 = On request.
It's possible to increase the hole, by boring, until **dm.**

ART. D603

TWO-SPOKE CONTROL HANDWHEEL WITH REVOLVING FOLDING HANDLE AND LOCK

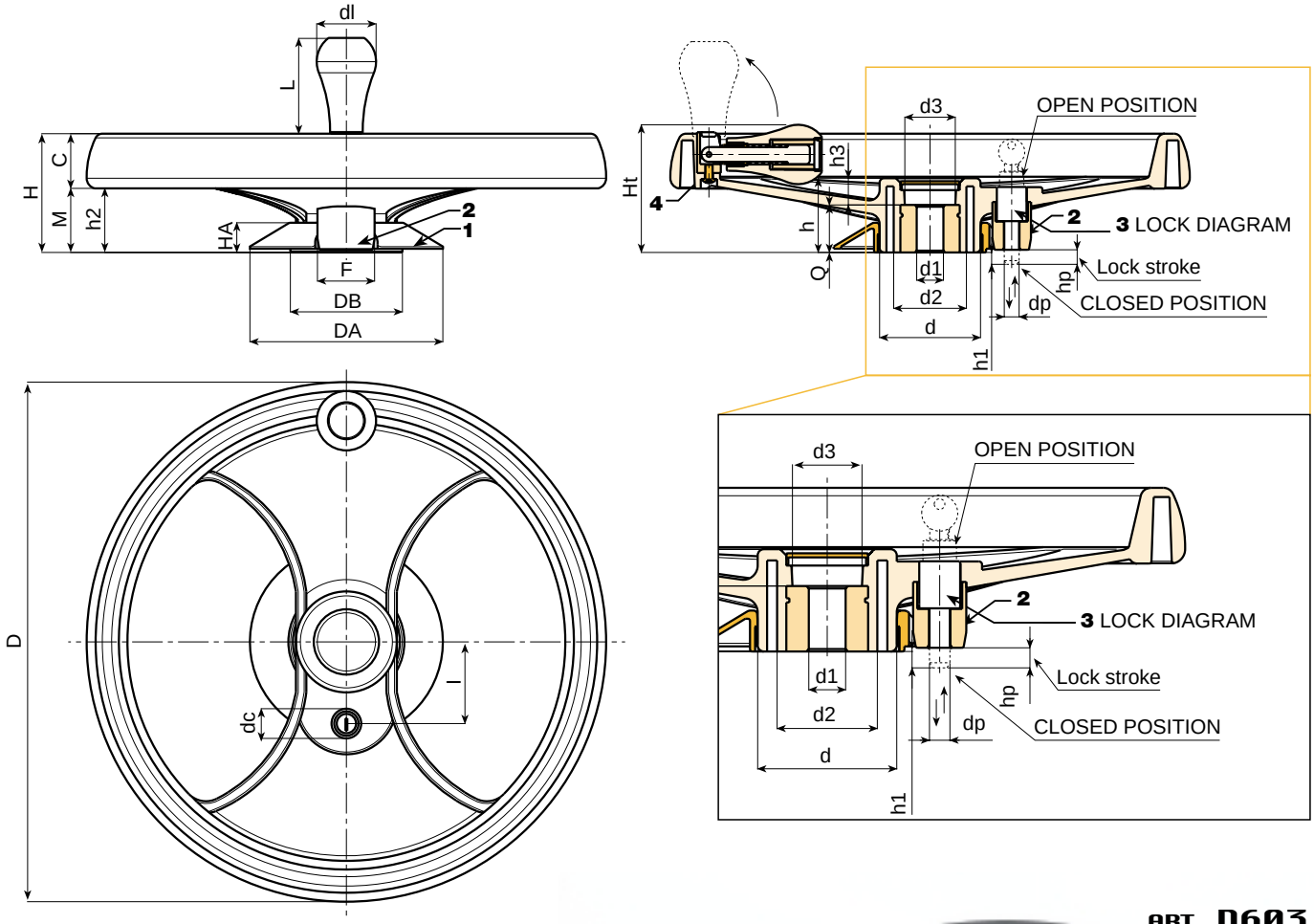

ART. D603

This type of product is an evolution of our traditional handwheel D207-350. By simply adding a special assembly kit this product can be adapted for use in a special market sector: that of compact shelving (sliding storage systems on rails). This handgrip is suitable for handling shelving on rails. A locking device or piston is used to lock, stop, position the shelving units in specific positions.

Art.	D	H	Ht	h	d	M	C	h2	h3	d2	d3	Q	dm	dl	L	Weight (gr)
D603-350	**346**	80	86	49,5	67,5	24	56	43,5	17,5	49	35	32	30	40	64	1800

Art.	l	dc	h1	dp	hp	DA	HA	DB	F
D603-350	55	20	8	10	10	131	20	76	38

d1 = On request.

It's possible to increase the hole, by boring, until **dm.**

ART. D604

TWO-SPOKE CONTROL HANDWHEEL WITH REVOLVING HANDLE AND LOCK

MATERIAL:
Reinforced and stabilised polyamide.
Oils and greases resistant.

SURFACE:
Satin.

COMPLETE HANDWHEEL COLOUR:
Black (RAL 9011).

CENTRAL CAP:
Grey polyamide (RAL 7035 code 13).

ALTERNATIVE CAP COLOUR:
Orange (RAL 2004 code 02).
Blue (RAL 5015 code 07).
Yellow (RAL 1021 code 10).
Red (RAL 3000 code 16).
Green (RAL 6024 code 17).
Black (RAL 9011 code 01).

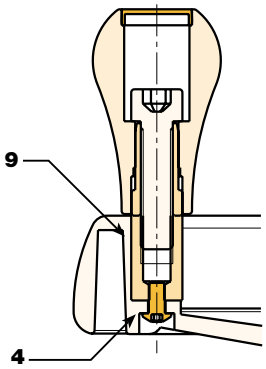

CLAMPING LOCK KIT:
(1) PA6+GF hole cover ring. Black (RAL 9011). Push-fit assembly. Removable.
(2) PA6+GF piston holder. Black (RAL 9011). Assembly by means of two self-tapping, galvanised steel screws, screwdriver head 3.5x30.
(3) Nickel plated lock. Two numbered keys provided. Key can be removed from either position. To close handwheel push and turn the key 90°. Lock stroke 10 mm. Useful projection of pin from handwheel 8 mm. Keys supplied secured to the handwheel rim.

Clamping lock kit

INSERTS:
(1) Customised galvanised steel through-hole insert.
(4) Black-oxide treated hexagon socket button head screw ISO 7838 for fastening handle.
(9) (art. D604) Black-oxide treated steel insert with hexagonal threaded through-hole.

SIDE HANDLE:
(art. D603) Flush, foldaway revolving handle, with hexagonal connection. Made from reinforced polyamide (shape same as art. M202). Black-oxide treated internal mechanism. Fixing by means of black-oxide treated hexagon socket button head screw ISO 7838. Grey polyamide push fit cap (RAL 7035 code 13).

(art. D604) Revolving handle Art. M202 (see Chapter M on page 18).

For fixing systems, or execution of tabs or square holes, please refer to the technical notes attached to the catalogue.

SPECIAL REQUESTS:

- It is possible to supply the inserts in different materials, on request and for quantities.
- It is possible to supply the inserts with different treatment-finishes, on request and for quantities.

ART. D604

Art.	D	H	Ht	h	d	M	C	h2	h3	d2	d3	Q	dm	dl	L	Weight (gr)
D604-350	**346**	80	86	49,5	67,5	24	56	43,5	17,5	49	35	32	30	40	64	1800

Art.	I	dc	h1	dp	hp	DA	HA	DB	F
D604-350	55	20	8	10	10	131	20	76	38

d1 = On request.
It's possible to increase the hole, by boring, until **dm.**

ART. D454

"EUROMODEL" FOUR ARM CONTROL HANDWHEEL

PROTECTED MODEL

MATERIAL:
Special high resistance glass fiber reinforced technopolymer.
Oils and greases resistant.

SURFACE:
Satin.

HANDWHEEL COLOUR:
Black (RAL 9011).

CENTRAL CAP:
Grey polyamide (RAL 7035 code 13).

ALTERNATIVE CAP COLOUR:
Orange (RAL 2004 code 02).
Blue (RAL 5015 code 07).
Yellow (RAL 1021 code 10).
Red (RAL 3000 code 16).
Green (RAL 6024 code 17).
Black (RAL 9011 code 01).

MAIN INSERT:
Zinc plated steel right through bored bush with H7 tolerance.

HUB:
Hollow underneath hub.

For fixing systems, or execution of tabs or square holes, please refer to the technical notes attached to the catalogue.

SPECIAL REQUESTS:

- It is possible to supply the inserts with d1 diameter by customer design, on request and for quantities.
- It is possible to supply the inserts with threaded d1 diameter, on request and for quantities.
- It is possible to supply the inserts in different materials, on request and for quantities.
- It is possible to supply the inserts with different treatment-finishes, on request and for quantities.

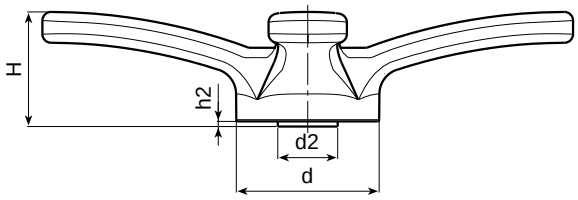

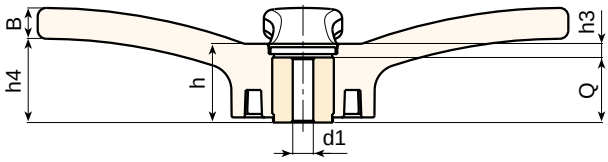

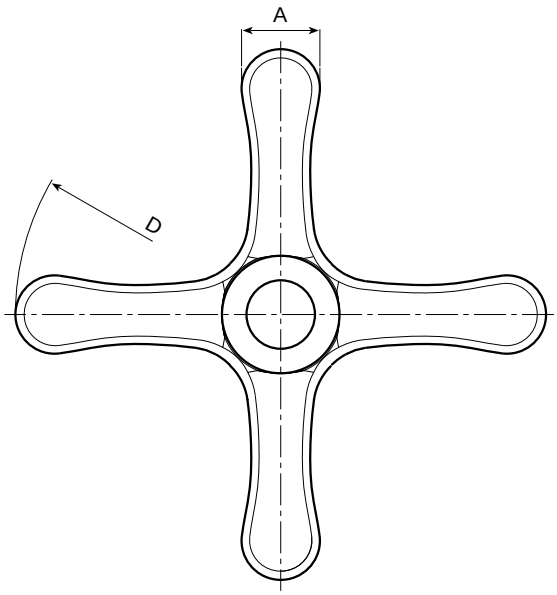

Art.	D	H	h	d	d2	A	B	h2	h3	h4	d3	d1 H7	Q	dm	Weight (gr)
D454-310 D05	**308**	66	45,5	83	35,5	45,5	20	3	7,5	46	34	**5 H9**	38	26	900
D454-310 D18	**308**	66	45,5	83	35,5	45,5	20	3	7,5	46	34	**18**	38	26	890

It's possible to increase the hole, by boring, until **dm.**
The range will shortly be extended with additional diameters.

ART. D214

THREE ARM CONTROL HANDWHEEL WITH SMOOTH OR THREADED HOLE

MATERIAL:
Reinforced polyamide.
Oils and greases resistant.

SURFACE:
Satin.

HANDWHEEL COLOUR:
Black (RAL 9011).

CENTRAL CAP:
Grey polyamide (RAL 7035 code 13).

ALTERNATIVE CAP COLOUR:
Orange (RAL 2004 code 02).
Blue (RAL 5015 code 07).
Yellow (RAL 1021 code 10).
Red (RAL 3000 code 16).
Green (RAL 6024 code 17).
Black (RAL 9011 code 01).

MAIN INSERT:
TD Version: Zinc plated steel right through bored bush with H7 tolerance.
TM Version: Zinc plated steel right through threaded bush.

For fixing systems, or execution of tabs or square holes, please refer to the technical notes attached to the catalogue.

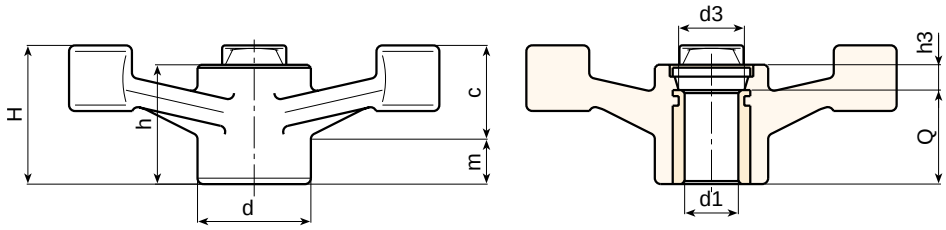

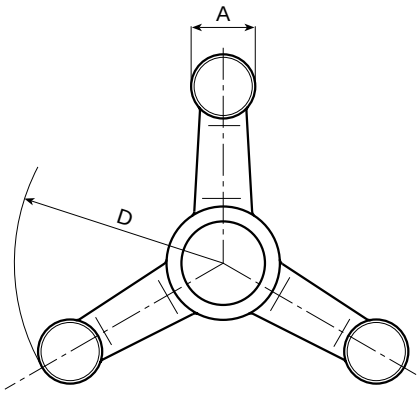

SPECIAL REQUESTS:

- It is possible to supply the inserts with d1 diameter by customer design, on request and for quantities.
- It is possible to supply the inserts with threaded d1 diameter, on request and for quantities.
- It is possible to supply the inserts in different materials, on request and for quantities.
- It is possible to supply the inserts with different treatment-finishes, on request and for quantities.
- It is possible to supply the complete handwheel in orange (RAL 2004 cod. 02), on request and for quantities.

TD Version with smooth through hole.

Art.	D	H	h	d	m	c	A	h3	d3	d1 H7	Q	dm	Weight (gr)
D214-140 TD05	**137**	45	39,5	38	19	26	22	7,5	26	**5 H9**	32	22	200
D214-140 TD12	**137**	45	39,5	38	19	26	22	7,5	26	**12**	32	22	195
D214-180 TD05	**177**	56	42,5	38	20	35	23	10,5	26	**5 H9**	32	22	280
D214-180 TD18	**177**	56	42,5	38	20	35	23	10,5	26	**18**	32	22	270
D214-220 TD05	**221**	61	46	38	22	39	25	14	26	**5 H9**	32	22	340
D214-220 TD18	**221**	61	46	38	22	39	25	14	26	**18**	32	22	330
It's possible to increase the hole, by boring, until **dm.**													

TM Version with threaded through hole.

Art.	D	H	h	d	m	c	A	h3	d3	d1	Q	dm	Weight (gr)
D214-140 TM12	**137**	45	39,5	38	19	26	22	7,5	26	**M12**	32	22	197
D214-140 TM14	**137**	45	39,5	38	19	26	22	7,5	26	**M14**	32	22	195
D214-140 TM16	**137**	45	39,5	38	19	26	22	7,5	26	**M16**	32	22	193
D214-180 TM16	**177**	56	42,5	38	20	35	23	10,5	26	**M16**	32	22	275
D214-180 TM18	**177**	56	42,5	38	20	35	23	10,5	26	**M18**	32	22	270
D214-220 TM14	**221**	61	46	38	22	39	25	14	26	**M14**	32	22	335
D214-220 TM16	**221**	61	46	38	22	39	25	14	26	**M16**	32	22	333
D214-220 TM18	**221**	61	46	38	22	39	25	14	26	**M18**	32	22	330

ART. D779

LIGHTWEIGHT CONTROL HANDWHEEL WITH HANDLE

MATERIAL:
Reinforced polyamide.
Oils and greases resistant.

SURFACE:
Satin.

HANDWHEEL AND HANDLE COLOUR:
Black (RAL 9011).

MAIN INSERT:
Zinc plated steel right through bored bush with H7 tolerance.

SIDE INSERT:
Brass right through threaded bush.

SIDE HANDLE:
Revolving handle Art. M144
(see chapter M on page 6).

For fixing systems, or execution of tabs or square holes, please refer to the technical notes attached to the catalogue.

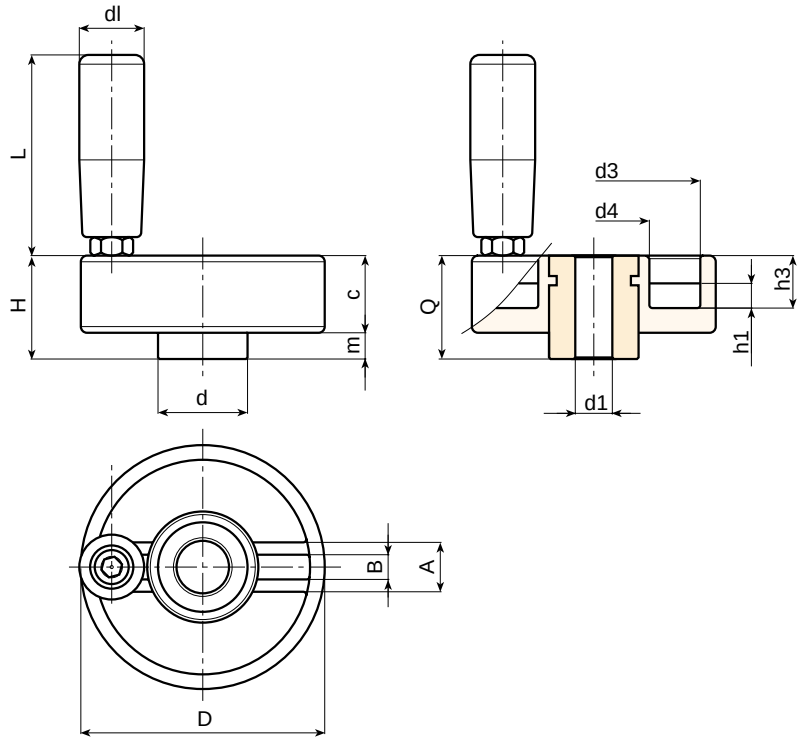

SPECIAL REQUESTS:

- It is possible to supply the inserts with d1 diameter by customer design, on request and for quantities.
- It is possible to supply the inserts in different materials, on request and for quantities.
- It is possible to supply the inserts with different treatment-finishes, on request and for quantities.
- It is possible to supply the complete handwheels with colours as shown in the table at page 19, on request and for quantities.

Art.	D	H	d	c	m	h1	h3	A	B	d3	d4	d1 H7	Q	dm	dl	L	Weight (gr)
D779-80 D05	**80**	34	29	25	9	8	17	16	7,5	69	36	**5 H9**	34	20	21	65	285
D779-80 D12	**80**	34	29	25	9	8	17	16	7,5	69	36	**12**	34	20	21	65	280

It's possible to increase the hole, by boring, until **dm.**

ART. D782

LIGHTWEIGHT CONTROL HANDWHEEL

MATERIAL:
Reinforced polyamide.
Oils and greases resistant.

SURFACE:
Satin.

HANDWHEEL COLOUR:
Black (RAL 9011).

MAIN INSERT:
Zinc plated steel right through bored bush with H7 tolerance.

For fixing systems, or execution of tabs or square holes, please refer to the technical notes attached to the catalogue.

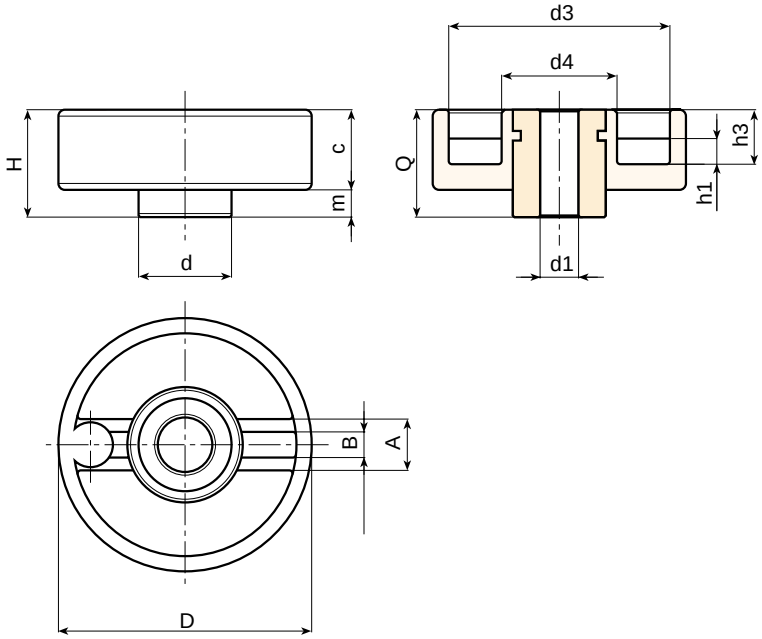

SPECIAL REQUESTS:

- It is possible to supply the inserts with d1 diameter by customer design, on request and for quantities.
- It is possible to supply the inserts in different materials, on request and for quantities.
- It is possible to supply the inserts with different treatment-finishes, on request and for quantities.
- It is possible to supply the complete handwheels with colours as shown in the table at page 19, on request and for quantities.

Art.	D	H	d	c	m	h1	h3	A	B	d3	d4	d1 H7	Q	dm	Weight (gr)
D782-80 D05	**80**	34	29	25	9	8	17	16	7,5	69	36	**5 H9**	34	20	230
D782-80 D12	**80**	34	29	25	9	8	17	16	7,5	69	36	**12**	34	20	227

It's possible to increase the hole, by boring, until **dm.**

ART. D161

TAPERED HANDWHEEL WITH SMOOTH OR THREADED HOLE

MATERIAL:
Reinforced polyamide.
Oils and greases resistant.

SURFACE:
Satin.

HANDWHEEL COLOUR:
Black (RAL 9011).

MAIN INSERT:
TD Version: Zinc plated steel blind bored bush with H7 tolerance.
TM Version: Zinc plated steel blind threaded bush.

For fixing systems, or execution of tabs or square holes, please refer to the technical notes attached to the catalogue.

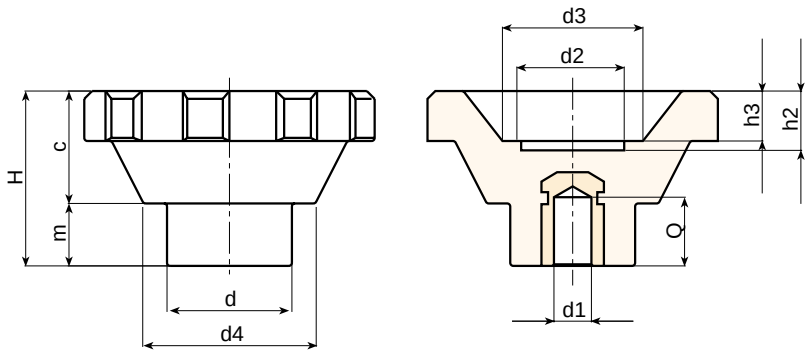

SPECIAL REQUESTS:

- It is possible to supply the inserts with d1 diameter by customer design, on request and for quantities.
- It is possible to supply the inserts in different materials, on request and for quantities.
- It is possible to supply the inserts with different treatment-finishes, on request and for quantities.

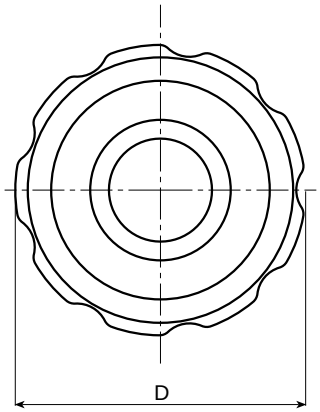

TD Version with smooth blind hole.

Art.	D	H	d	c	m	d2	d3	d4	h2	h3	d1 H7	Q	dm	Weight (gr)
D161-95 TD05	**93**	56,5	40	36,5	20	32	45	55,5	20	17	**5 H9**	27	22	340
D161-95 TD16	**93**	56,5	40	36,5	20	32	45	55,5	20	17	**16**	25	22	335

TM Version with threaded blind hole.

Art.	D	H	d	c	m	d2	d3	d4	h2	h3	d1	Q	Weight (gr)
D161-95 TM12	**93**	56,5	40	36,5	20	32	45	55,5	20	17	**M12**	25	338

It's possible to increase the hole, by boring, until **dm.**

Colour Chart

RAL

Colour		RAL	Code
Black		9011	01
Orange		2004	02
Orange		2011	03
White		9010	04
Blue		5002	05
Blue		5005	06
Blue		5015	07
Blue		5018	19
Blue		5019	21
Blue		5010	22
Yellow		1007	09
Yellow		1021	10
Grey		7024	12
Grey		7035	13
Red		3000	16
Green		6024	17

Other Colours

Colour		Ref.	Code
White		-	52
Blue		-	53
Blue		pant. 645 U	54
Blue		pant. 300	55
Grey		-	57
Grey		-	59
Grey		NCS 7500	60
Red		-	64
Red		-	65
Natural		-	66
Green		-	70
Brown		-	71
Cream		-	72
Violet		-	73