CPS mini chain

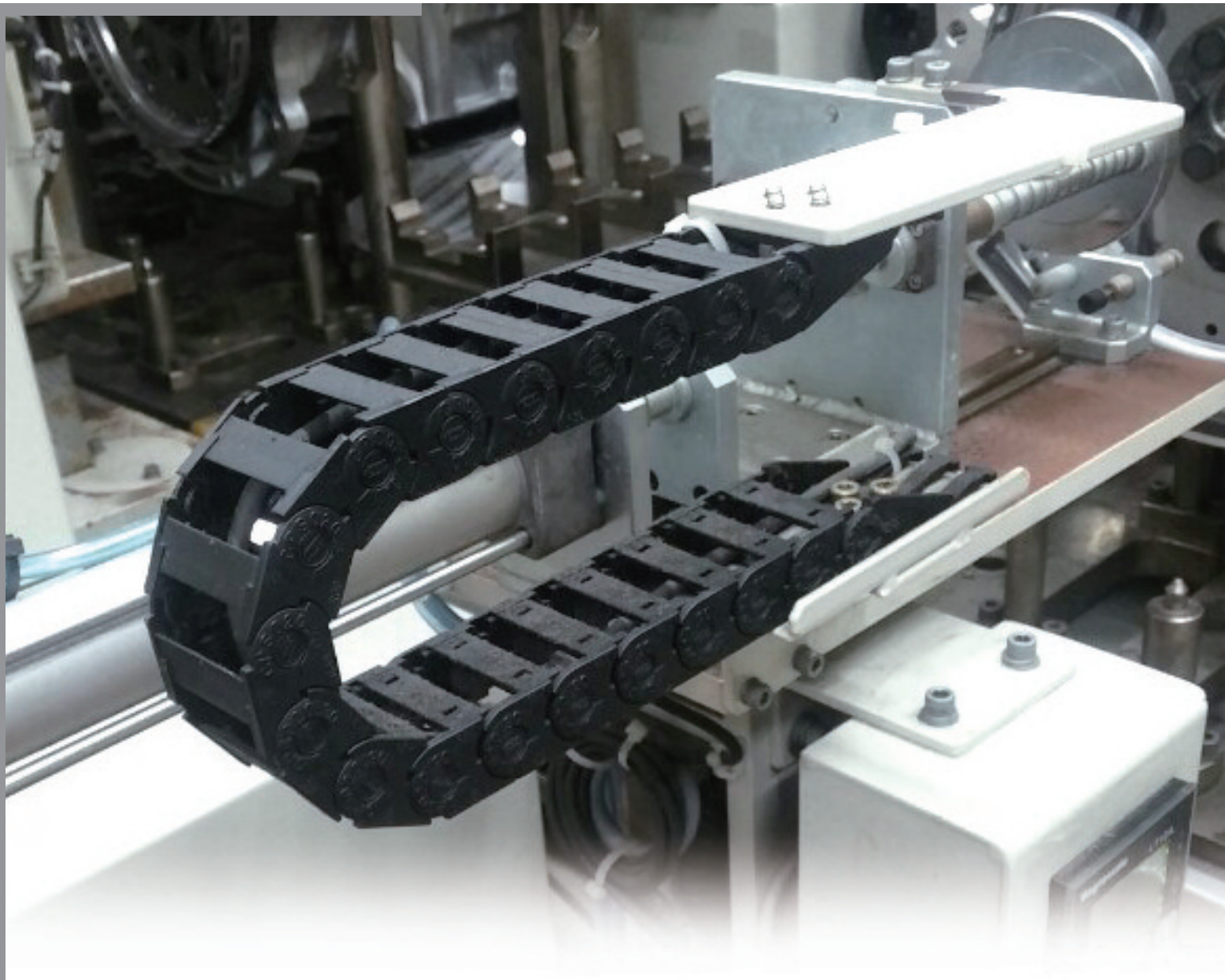

General information

Item	Value
Material	CPS-Amid(PA6+GF), RoHs
Noise range	40dB(DIN EN 61672-1)
Speed	3m/s
Acceleration	10m/s²
Temperature	-30℃ ~+130℃
Special production	ESD, UV
Certificate	CE, ATEX(Ex)

Calculation table

Item	Value
Length of Cable Chain	L = ½ X LS + LP
Bending Radius	
The biggest Cable inserted	Multiply 8~10 and the biggest cable
The biggest Hydraulic Hose inserted	Multiply 15~20 and the biggest hose

Dimension table

CPS Cable Chain MINI Type	Pitch	Bending Radius(R)	Weight kg/m	Speed m/sec	Temperature ℃	Size A	Size B	Size C	Size D	Frame type	Section - composition
CPS 015	15	18, 28, 38	0.100 0.106 0.111 0.115	3	-30 ~ +130	12.6 16.6 21.6 26.6	13	6 10 15 20	10		
CPS 020	20	28, 38, 48	0.245 0.260 0.285 0.310	3	-30 ~ +130	24 29 39 49	20	15 20 30 40	14.5		
CPS 030	30	38, 48, 75, 100	0.380 0.400 0.420 0.440	3	-30 ~ +130	29 39 49 64	26	15 25 35 50	19		
CPS 033	33	35, 45, 75, 100, 120	0.550 0.590 0.610 0.680 0.700	3	-30 ~ +130	45 55 65 85 95	31	27 37 47 67 77	23		

(Dimensions in mm)

Ordering

CPS 015. 10. R28 / B2 - 550L : 10ST

- Q'ty(set)
- Length(mm)
- Bracket Type : B1, B2, B3 : E (CPS033)
- Bending radius
- Inside width
- CPS CABLECHAIN

Bracket type

- CPS015, CPS020, CPS030

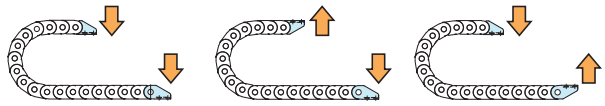

B1 B2 B3

- CPS033

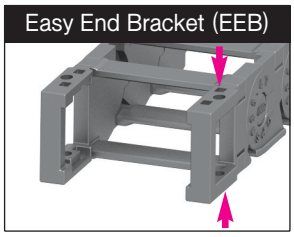

There are fixing holes of two directions including upper side and lower side.

Application of CPS mini Chain

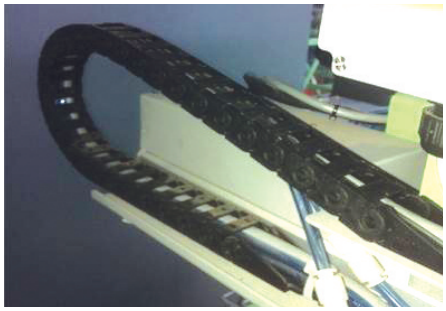

▲ Factory lines.

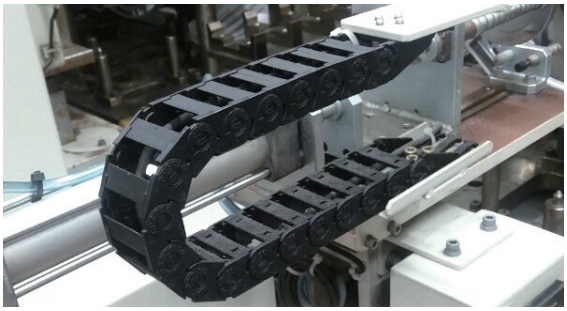

▲ Machine tools.

CPS 015

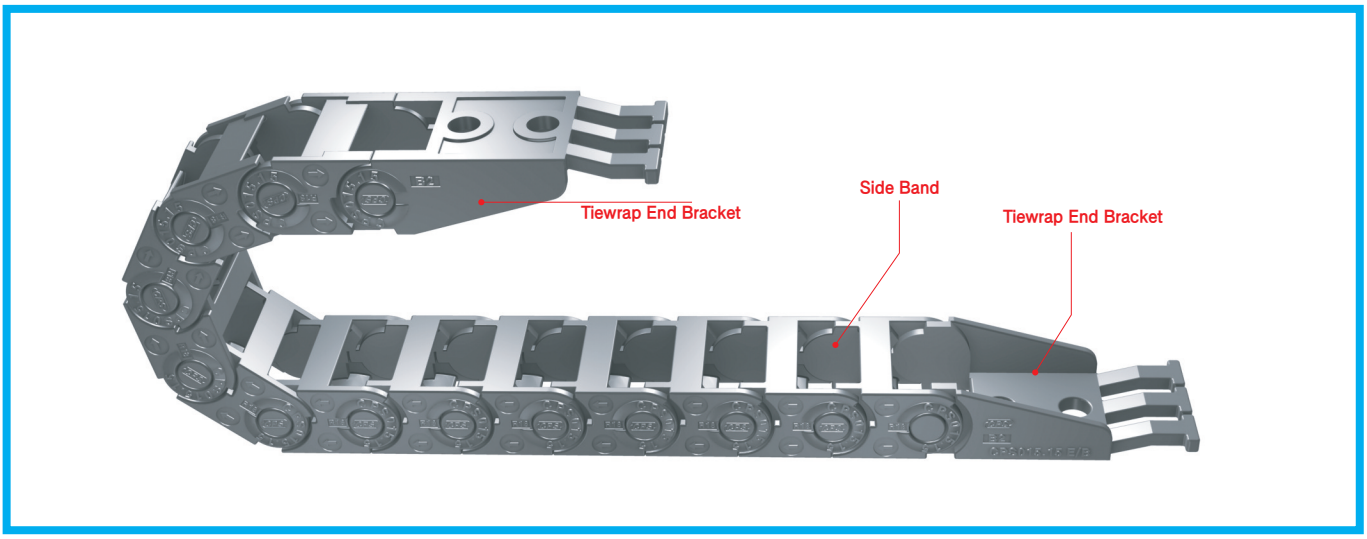

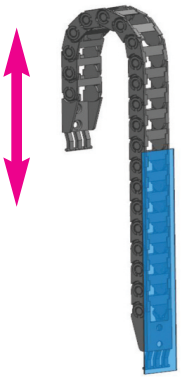

Vertical with curve above

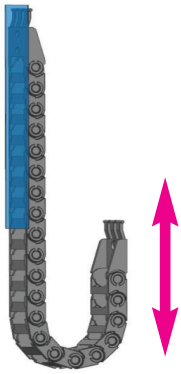

Vertical with curve below

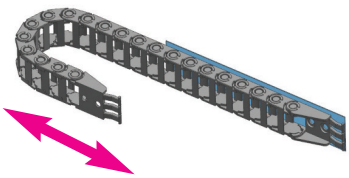

Horizontal application mounted on its side

Calculation of the chain length

$$[\ L = \frac{Ls}{2} + Lp\ ]$$

Other installation length

Vertical curve above = max 0.8m
Vertical curve below = max 3.0m
Side Mounted, Unsupported = max 0.2m

Load diagrams self-supporting length

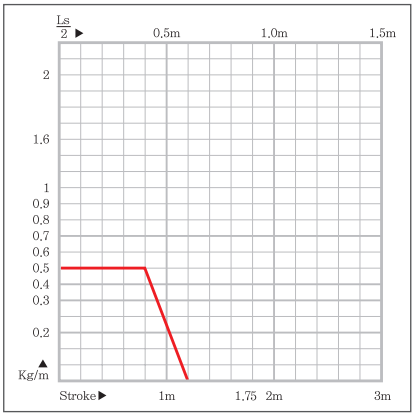

Layout of the chain

Ls: Stroke Hs: Safe Space

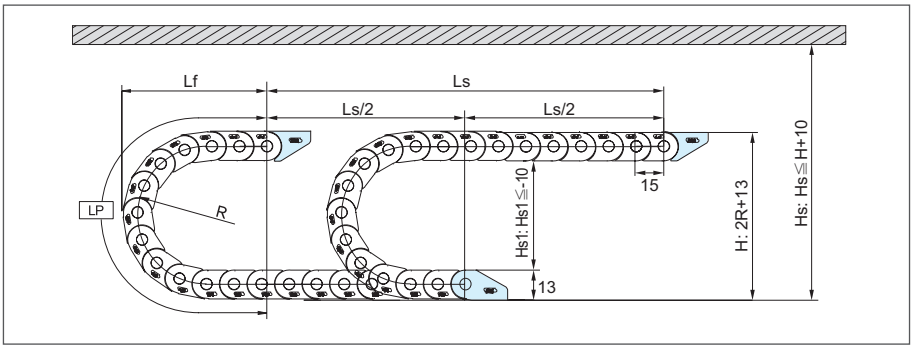

Bending Radius (R)	Lp Loop Length	Lf Loof Projection	H Moving Height
18	117	55	49
28	148	65	69
38	180	75	89

(Dimensions in mm)

Chain radius, Weight

Chain Type	Bending Radius (R)	Weight kg/m
CPS 015.06	18, 28, 38	0.100
CPS 015.10		0.106
CPS 015.15		0.111
CPS 015.20		0.115

(Dimensions in mm)

Chain cross section

(Dimensions in mm)

CPS015.06

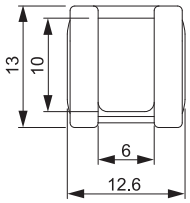

CPS015.10

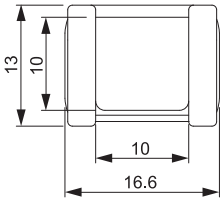

CPS015.15

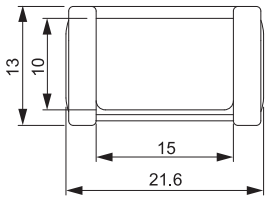

CPS015.20

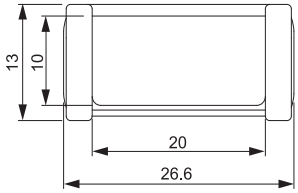

End bracket (Tie wrap type)

(Dimensions in mm)

CPS015.06 Moving point

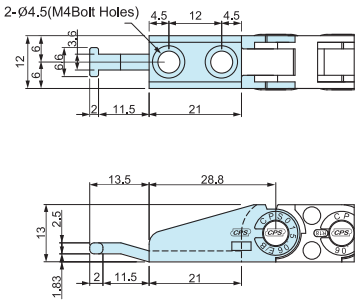

CPS015.06 Fixing point

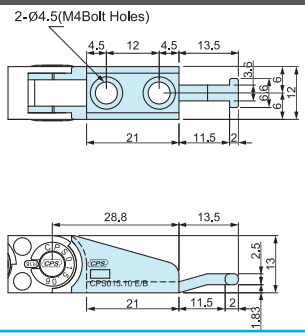

CPS015.10 Moving point

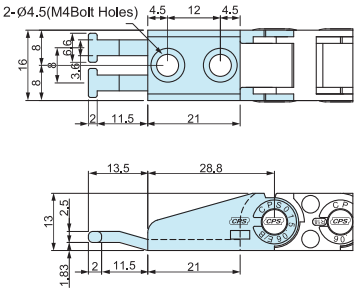

CPS015.10 Fixing point

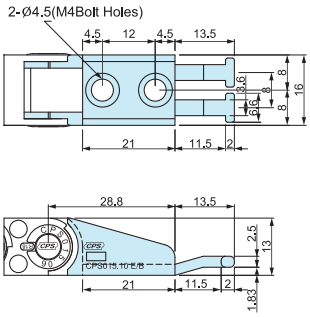

CPS015.15 Moving point

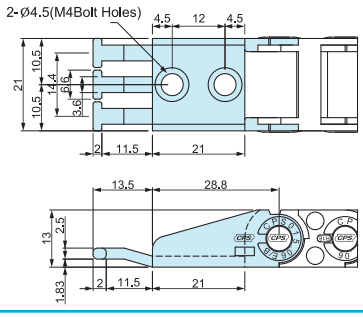

CPS015.15 Fixing point

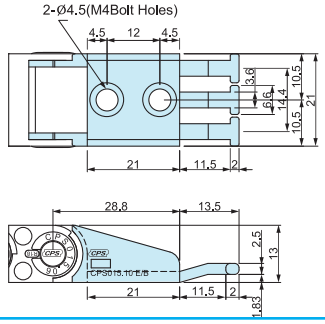

CPS015.20 Moving point

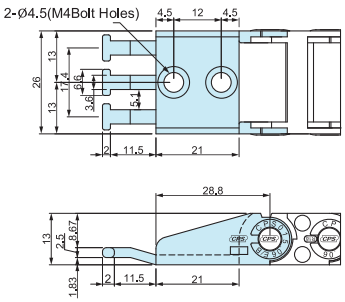

CPS015.20 Fixing point

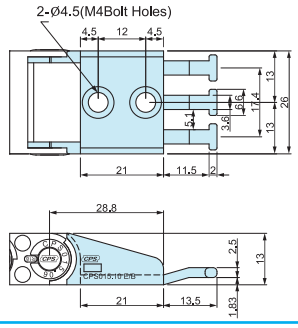

CPS 020

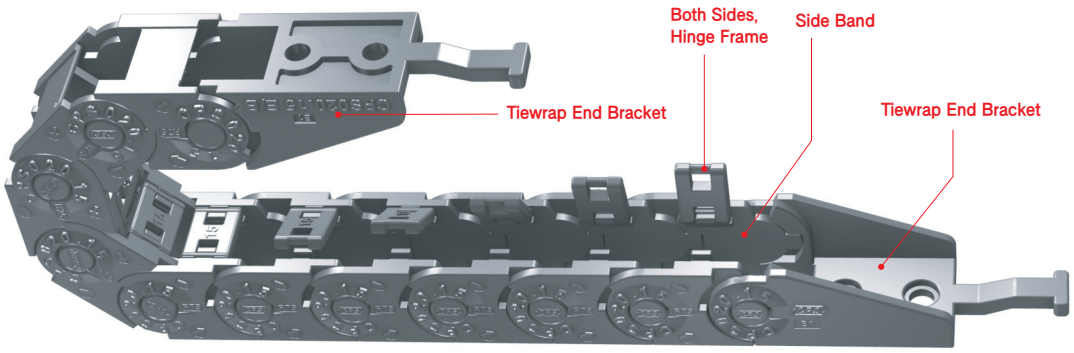

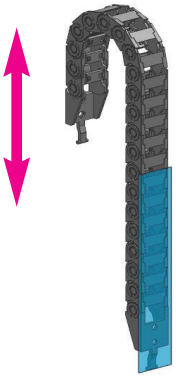

Vertical with curve above

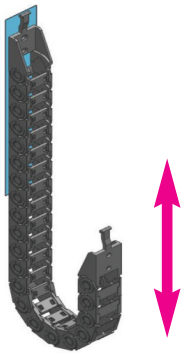

Vertical with curve below

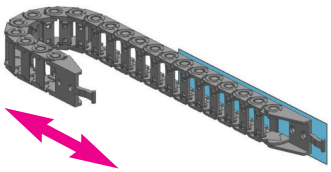

Horizontal application mounted on its side

Calculation of the chain length

$$[\ L = \frac{Ls}{2} + Lp\ ]$$

Other installation length

Vertical curve above = max 1.0m
Vertical curve below = max 5.0m
Side Mounted, Unsupported = max 0.5m

Load diagrams self-supporting length

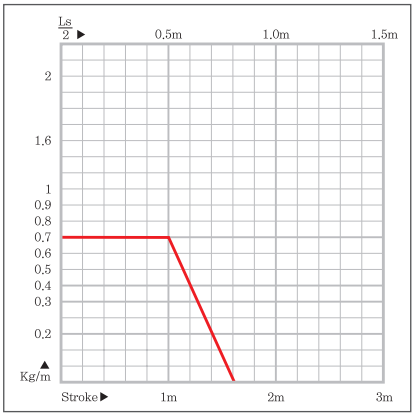

Layout of the chain

Ls: Stroke Hs: Safe Space

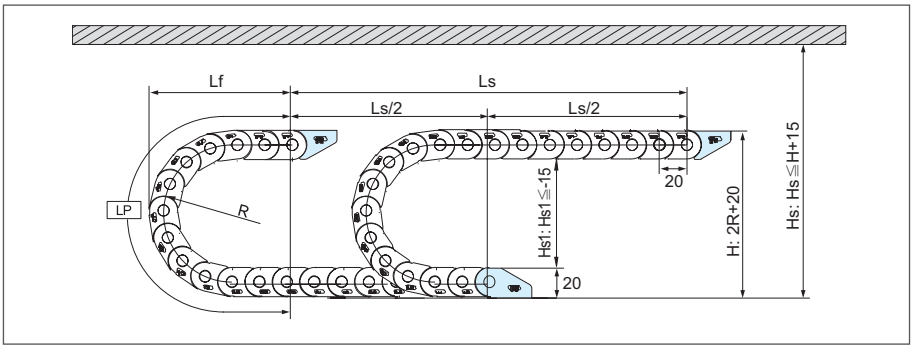

Bending Radius (R)	Lp Loop Length	Lf Loof Projection	H Moving Height
28	170	78	76
38	200	88	96
48	230	98	116

(Dimensions in mm)

Chain radius, Weight

Chain Type	Bending Radius (R)	Weight kg/m
CPS 020.15	28, 38, 48	0.245
CPS 020.20		0.260
CPS 020.30		0.285
CPS 020.40		0.310

(Dimensions in mm)

Chain cross section

(Dimensions in mm)

CPS020.15

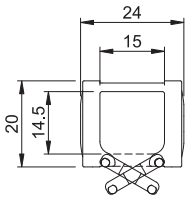

CPS020.20

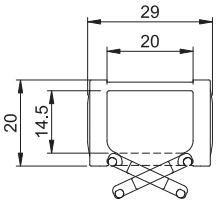

CPS020.30

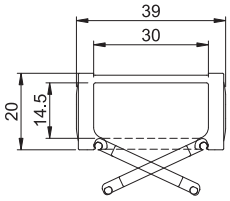

CPS020.40

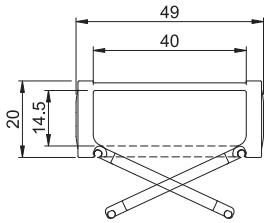

End bracket (Tie wrap type)

(Dimensions in mm)

CPS020.15 Moving point

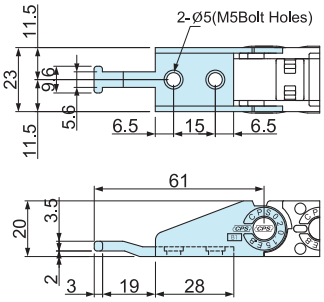

CPS020.15 Fixing point

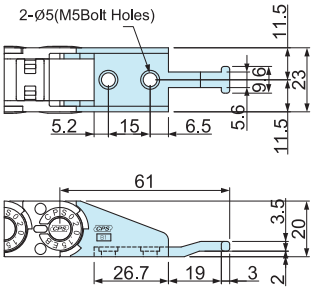

CPS020.20 Moving point

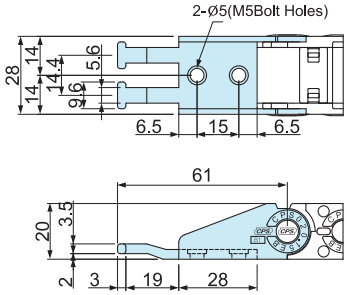

CPS020.20 Fixing point

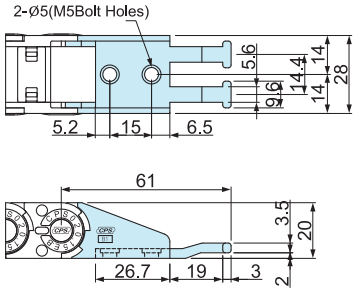

CPS020.30 Moving point

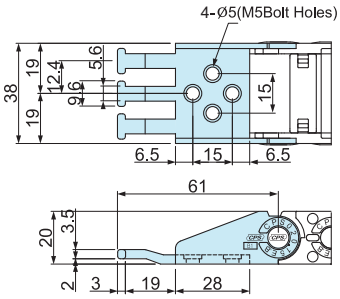

CPS020.30 Fixing point

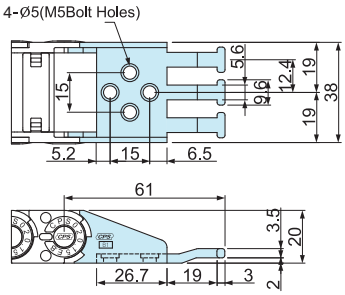

CPS020.40 Moving point

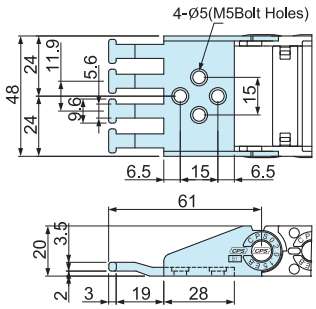

CPS020.40 Fixing point

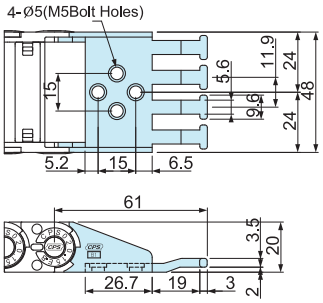

CPS 030

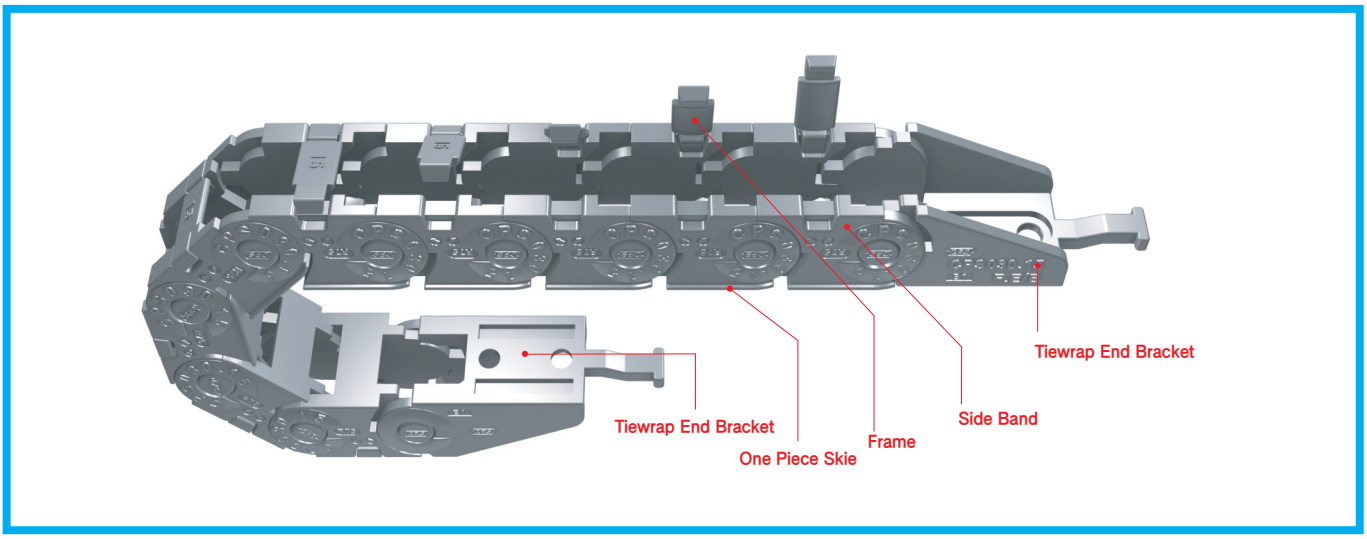

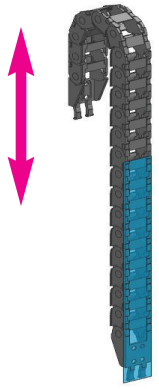

Vertical with curve above

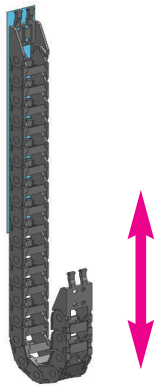

Vertical with curve below

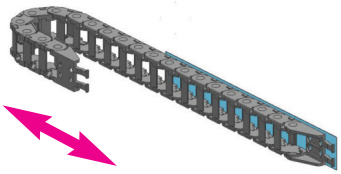

Horizontal application mounted on its side

Calculation of the chain length

$$[\ L = \frac{Ls}{2} + Lp\ ]$$

Other installation length

Vertical curve above = max 1.5m
Vertical curve below = max 10.0m
Side Mounted, Unsupported = max 0.6m

Load diagrams self-supporting length

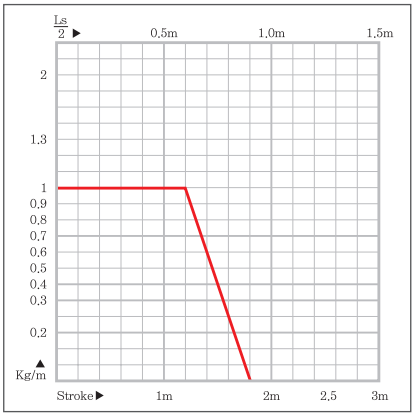

Layout of the chain

Ls: Stroke Hs: Safe Space

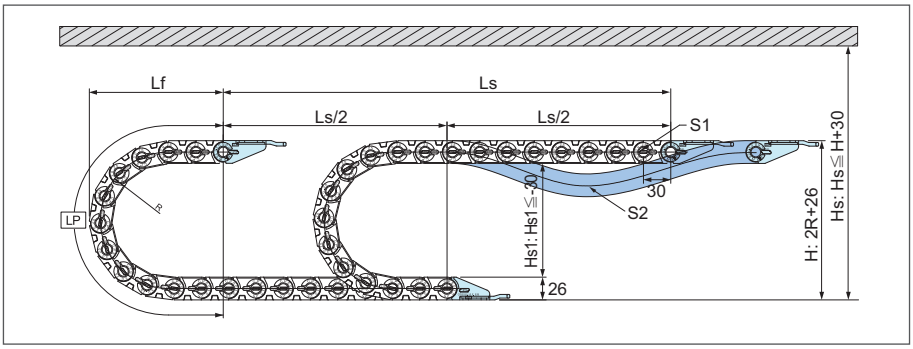

Bending Radius (R)	Lp Loop Length	Lf Loof Projection	H Moving Height
38	240	110	101
48	271	119	121
75	356	148	175
100	434	173	225

(Dimensions in mm)

Chain radius, Weight

Chain Type	Bending Radius (R)	Weight kg/m
CPS 030.15	38, 48, 75, 100	0.38
CPS 030.25		0.40
CPS 030.35		0.42
CPS 030.50		0.44

(Dimensions in mm)

Chain cross section

(Dimensions in mm)

CPS030.15

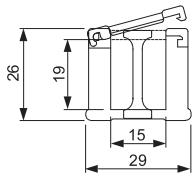

CPS030.25

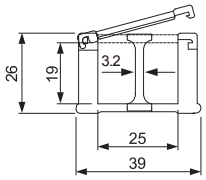

CPS030.35

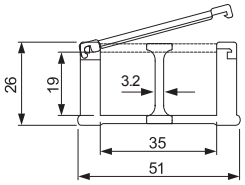

CPS030.50

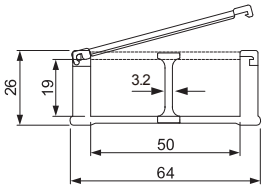

End bracket (Tie wrap type)

(Dimensions in mm)

CPS030.15 Moving point

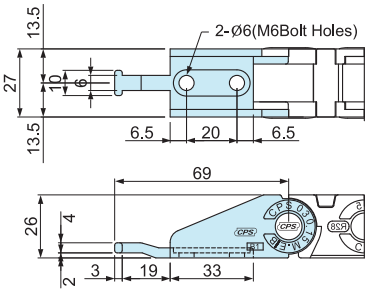

CPS030.15 Fixing point

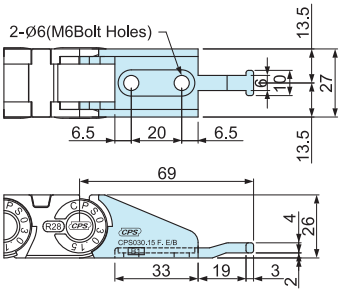

CPS030.25 Moving point

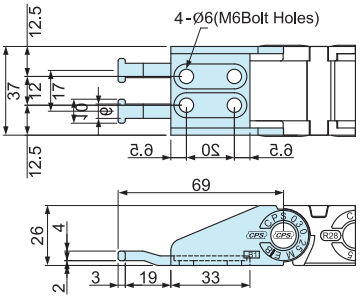

CPS030.25 Fixing point

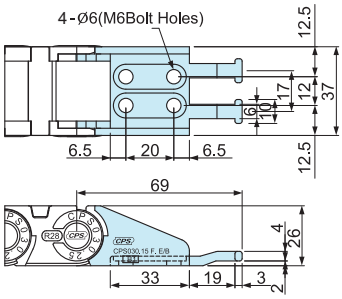

CPS030.35 Moving point

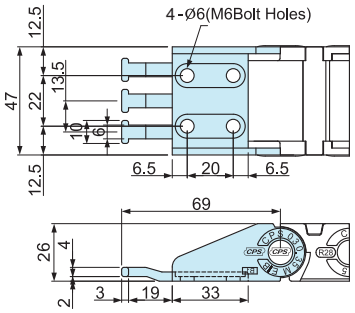

CPS030.35 Fixing point

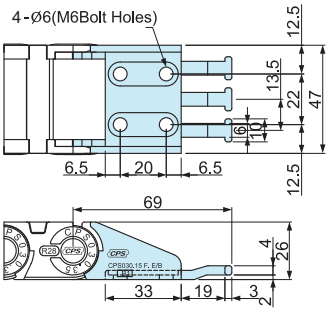

CPS030.50 Moving point

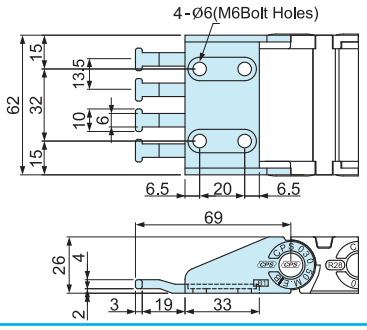

CPS030.50 Fixing point

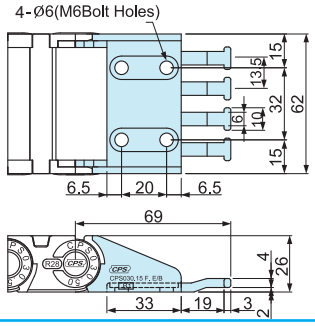

CPS 033

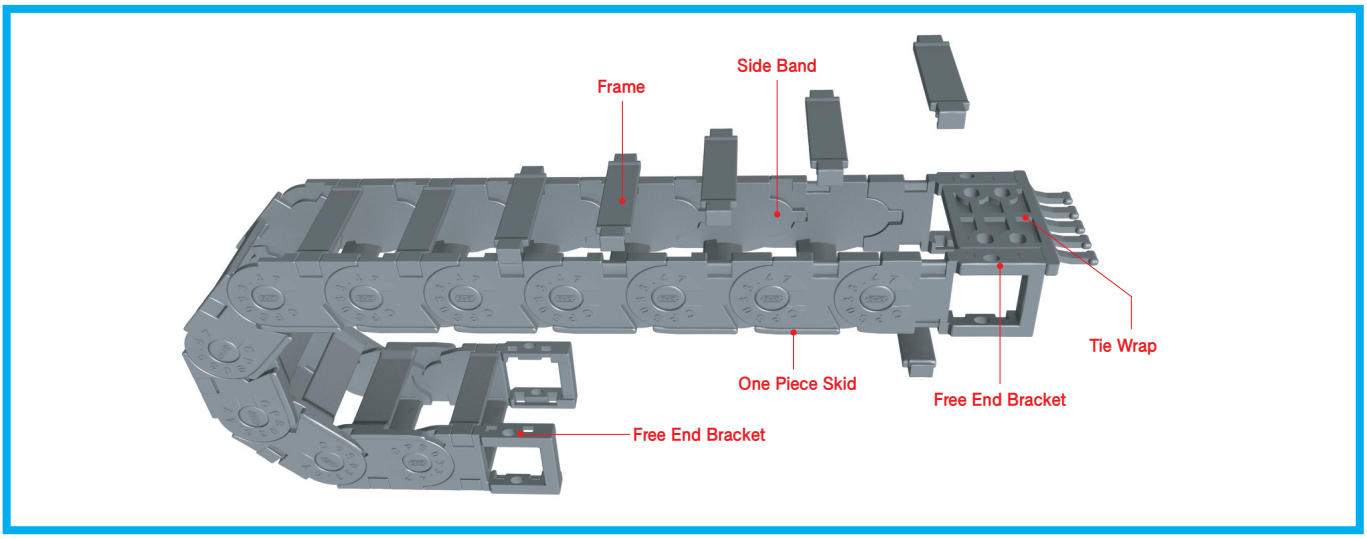

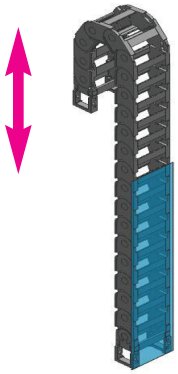

Vertical with curve above

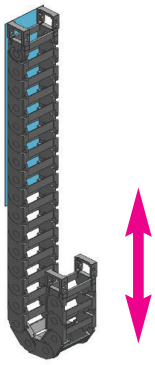

Vertical with curve below

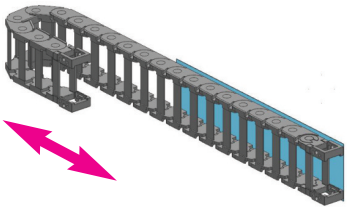

Horizontal application mounted on its side

Calculation of the chain length

$$[\ L = \frac{Ls}{2} + Lp\ ]$$

Other installation length

Vertical curve above = max 1.5m
Vertical curve below = max 10.0m
Side Mounted, Unsupported = max 0.6m

Load diagrams self-supporting length

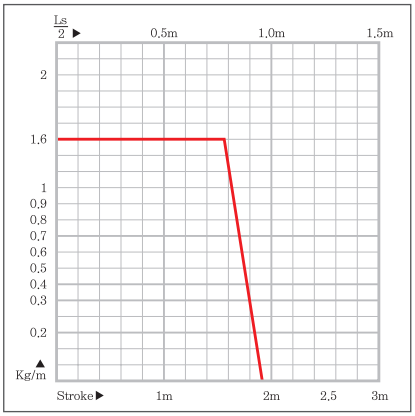

Layout of the chain

Ls: Stroke Hs: Safe Space

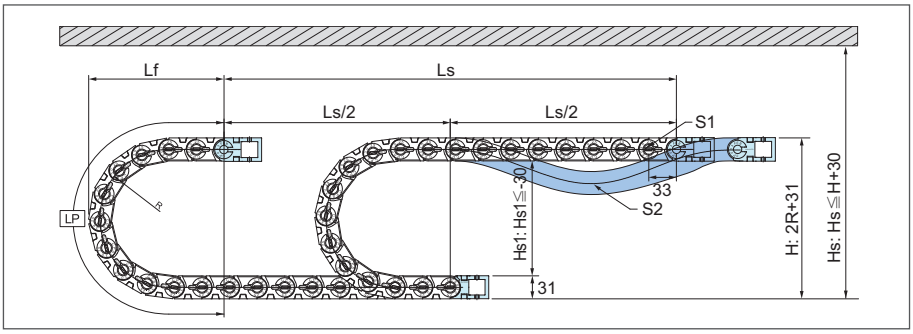

Bending Radius (R)	Lp Loop Length	Lf Loof Projection	H Moving Height
35	242	117	101
45	274	127	121
75	368	157	181
100	446	182	231
120	509	202	271

(Dimensions in mm)

Chain cross section

(Dimensions in mm)

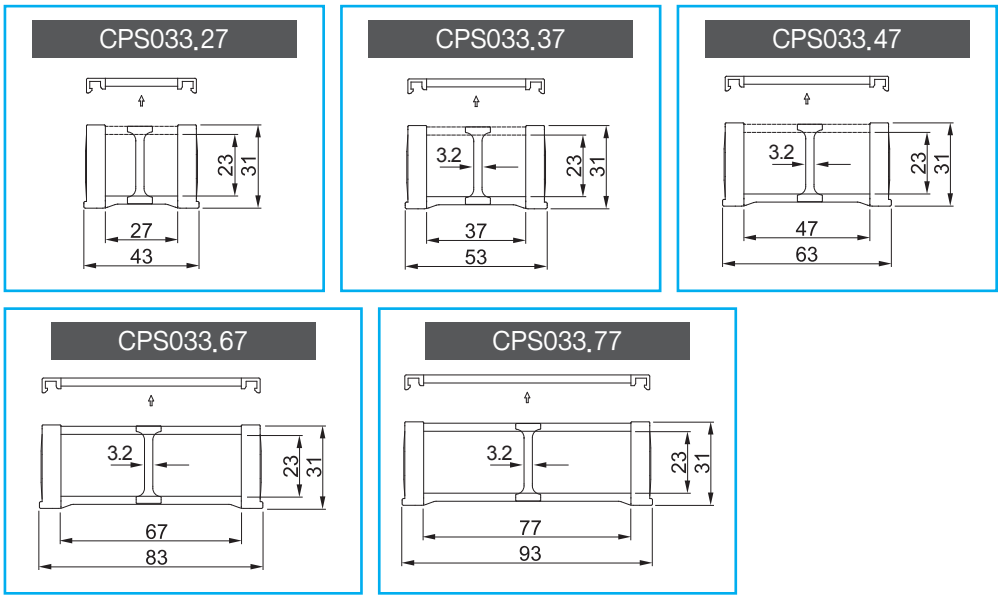

Easy end bracket

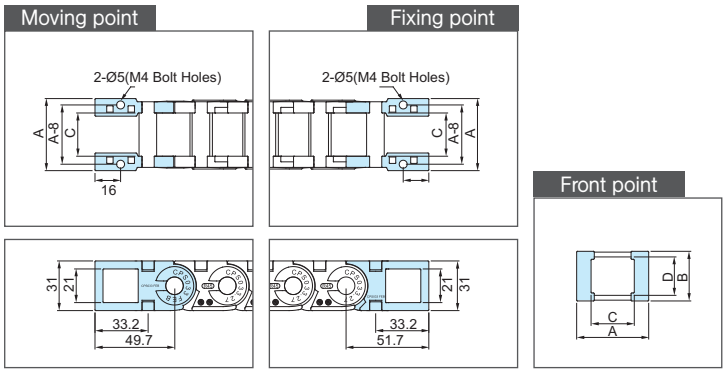

Chain Type	A Width(Outer)	B Height(Outer)	C Frame	D Height(Inner)	Hole Type
CPS 033	45 55 65 85 95	31	27 37 47 67 77	23	M4 Bolt Holes

(Dimensions in mm)

Tie wrap (TW)

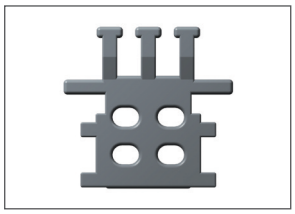

Tie wrap prevents cut off problem of the cable by the twisting and pulling movement.
The tie wrap of this CPS CABLE Chain has two types, separated with bracket type and attached with bracket type.

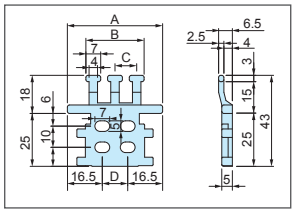

Chain Type	Ordering No.	A	B	C	D
CPS 033	S-TW033/20CR.27	45.0	27.5	10.20	12.0
	S-TW033/20CR.37	55.0	41.0	8.50	22.0
	S-TW033/20CR.47	65.0	48.0	10.40	32.0
	S-TW033/20CR.67	85.0	68.0	10.00	52.0
	S-TW033/20CR.77	95.0	78.0	8.87	62.0

(Dimensions in mm)

Easy end bracket (Tie wrap type)

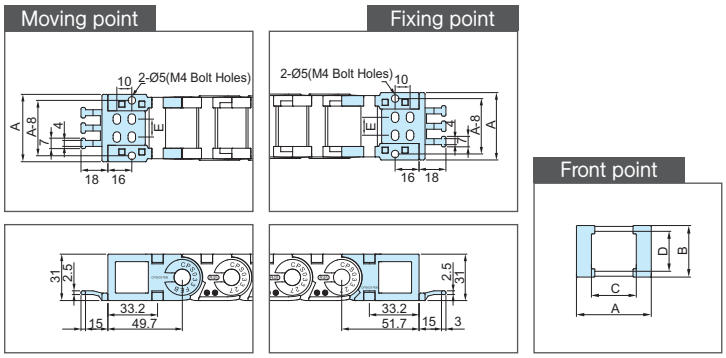

Chain Type	A Width(Outer)	B Height(Outer)	C Frame	D Height(Inner)	E Hole width	Hole Type
CPS 033	45 55 65 85 95	31	27 37 47 67 77	23	12 22 32 52 62	M4 Bolt Holes

(Dimensions in mm)