Flachsauger
Flat suction cups
Ventouses plates

Suchkriterien für diesen Katalog: **Art→Form→Durchmesser**
Search criteria for this catalog: Type→Shape→Diameter
Critères de recherche pour ce catalogue: type→form→diamètre

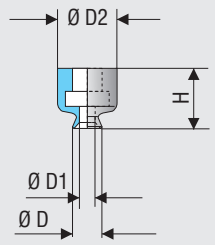

Art.No.*	Material *Material* Matériel			Ø D	Ø D1	Ø D2	H
102.002.004	NBR (sw), Si (tr), Si-AS (sw), PUR (bl), PUR (ge)	0,4 mm	0,2 g	2,0	1,0	4,0	4,0
102.003.005		0,5 mm	0,2 g	3,5	1,0	4,0	4,0

Art.No.*	Art.No.		Seite *page*
102.002.004 102.003.005	**270.300**	M 5 AG	16

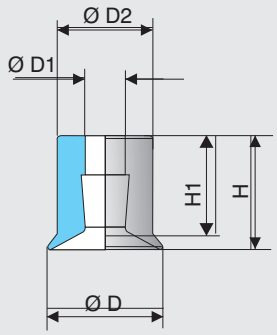

Art.No.*	Material *Material* Matériel			Ø D	Ø D1	Ø D2	H	H1
102.005.090	NBR (sw), Si (tr),	0,5 mm	0,2 g	5,0	2,0	4,5	6,0	5,5
102.011.093		1,0 mm	0,3 g	11,0	3,8	9,0	10,5	9,2

Art.No.*	Art.No.		Seite *page*
102.005.090	**270.153**	M 5 AG	16
102.011.093	**270.104** **270.134**	M 6 AG M 5 AG	16 16

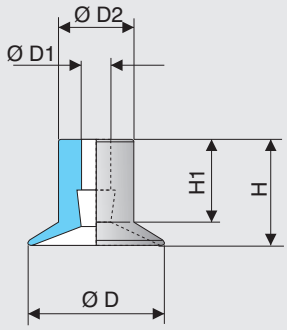

Art.No.*	Material *Material* Matériel			Ø D	Ø D1	Ø D2	H	H1
102.007.091	NBR (sw), Si (tr),	1,0 mm	0,1 g	7,0	2,0	5,0	6,5	5,5
102.009.092		1,5 mm	0,1 g	9,0	2,0	5,0	7,0	5,5
102.016.098		2,0 mm	0,8 g	16,0	3,8	9,0	11,5	8,5

Art.No.*	Art.No.		Seite *page*
102.007.091 102.009.092	**270.153**	M 5 AG	16
102.016.098	**270.003** **270.104** **270.134** **270.109**	G1/8" AG M 6 AG M 5 AG G1/8" IG	17 16 16 18

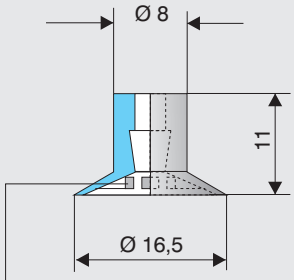

Abstützrippen/ *cleats*/ tasseau

Art.No.*	Material *Material* Matériel		
104.016.003	NBR (sw), Si (tr),	0,5 mm	0,8 g

Art.No.*	Art.No.		Seite *page*
104.016.003	**270.003** **270.104** **270.134** **270.109**	G1/8" AG M 6 AG M 5 AG G1/8" IG	17 16 16 18

* Bei Bestellung bitte gewünschtes Material angeben (siehe Seite 27).
** When ordering, please indicate desired material (see page 27).*
* Précisez le matériel souhaité a la commande (voir page 27).

Flachsauger
Flat suction cups
Ventouses plates

A

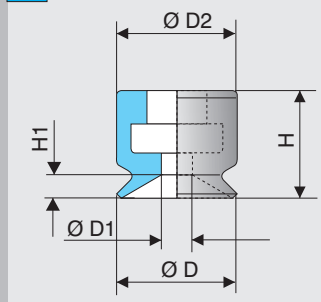

B

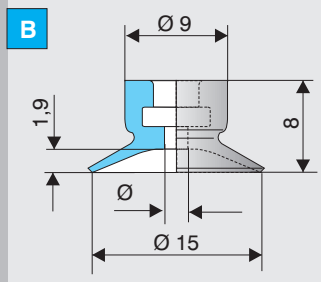

Form	Art.No.*	Material *Material* Matériel			Ø D	Ø D1	Ø D2	H	H1
A	102.005.009	NBR (sw), Si (tr), Si-AS (sw), PUR (bl)	0,9 mm	0,04 g	5,0	1,5	7,5	6,5	0,9
	102.006.013		1,0 mm	0,07 g	6,0	2,0	7,5	6,5	1,0
	102.008.017		1,4 mm	0,4 g	8,0	2,0	8,0	7,0	1,4
	102.010.024		1,2 mm	0,2 g	10,0	2,0	8,5	7,5	1,3
B	102.015.309	NBR(sw), Si(tr), PUR(bl)	1,9 mm	0,5 g	15,0		9,0	8,0	1,9

Art.No.*	Art.No.		Seite *page*
102.005.009 102.006.013 102.008.017 102.010.024 102.015.309	**270.005** **270.010** **270.007** **270.009**	M 5 IG M 5 AG G1/8" IG G1/8"AG	16 16 18 17

A

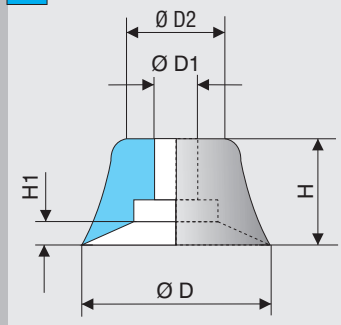

B

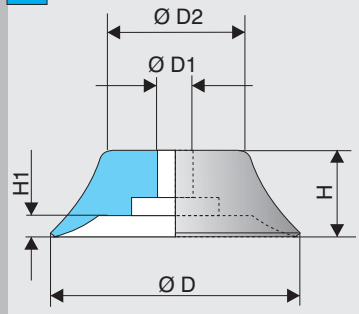

Form	Art.No.*	Material *Material* Matériel			Ø D	Ø D1	Ø D2	H	H1
A	102.015.030	NBR (sw), Si (tr), PUR (bl)	2,0 mm	0,6 g	15	4,5	10	8	1,9
	102.020.041		2,0 mm	1,5 g	20	4,5	12	10	2,3
	102.025.047		2,5 mm	2,7 g	25	6,0	13	14	3,0
	102.030.053		2,0 mm	3,3 g	30	6,0	11	12	2,0
B	102.035.056		3,0 mm	6,0 g	35	6,0	18	14	3,0
	102.040.061		3,0 mm	7,6 g	40	6,0	21	14	3,5
	102.050.065		3,5 mm	11,2 g	50	8,0	23	15	4,0

Art.No.*	Art.No.		Seite *page*
102.015.030	**270.005** **270.010** **270.017** **270.021**	M 5 IG M 5 AG G1/8" IG G1/8" AG	16 16 18 17
102.020.041	**270.006** **270.018**	G1/8" AG G1/8" IG	17 18
102.025.047 102.030.053 102.035.056 102.040.061	**270.019** **270.030** **270.274** **270.275** **270.312**	G1/8" IG G1/8" AG G1/4" AG G1/4" IG M 6 AG	18 17 19 20 17
102.050.065	**270.012** **270.020** **270.034** **270.308** **270.314** **270.314**	G1/8" AG G1/8" IG G1/4" AG G1/4" IG M 6 AG	17 18 19 20 17 17

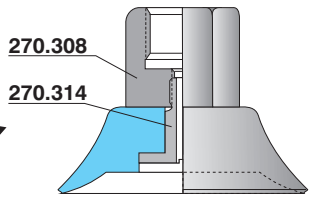

* Bei Bestellung bitte gewünschtes Material angeben (siehe Seite 27).
* *When ordering, please indicate desired material (see page 27).*
* Précisez le matériel souhaité a la commande (voir page 27).

Flachsauger
Flat suction cups
Ventouses plates

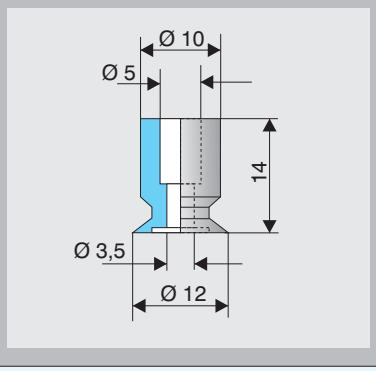

Art. No. 107.012.002._*	NBR (sw), Si (tr), NR-E (b)	0,4 mm	0,5 g

Art.No.*	Art.No.		Seite *page*
107.012.002	**270.013**	M 5 AG	16

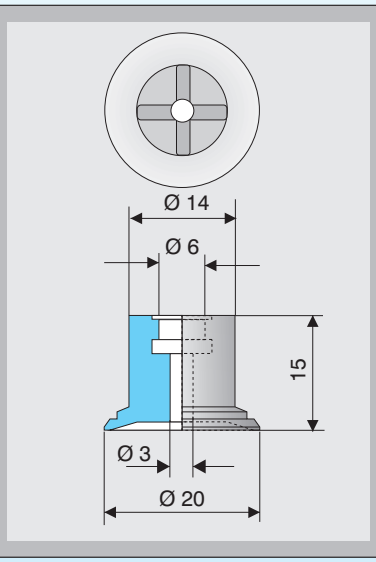

Art. No.	Material *Material* Matériel			
102.020.083.2	Si (tr)	30 Shore	1,0 mm	2,0 g
102.020.080.1	NBR (sw)	40 Shore		
102.020.082.1	NBR (sw)	60 Shore		
102.020.084.2	Si (r)	60 Shore		

Art.No.*	Art.No.		Seite *page*
102.020.083.2	**270.037**	M 5 AG	16
102.020.080.1	**270.085**	G1/8" AG	17
	270.086	G1/8" IG	18
102.020.082.1	**270.373**	M 6 AG	17
102.020.084.2	**270.374**	M 8 AG	17

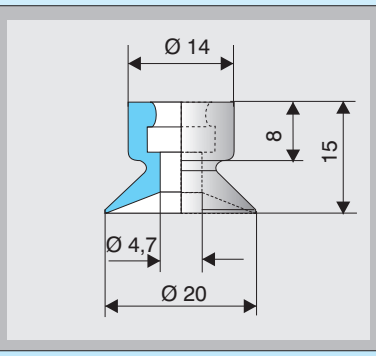

Art. No. 126.020.020._*	NR (or) Si (tr) FKM (sw)	3,5 mm	2,2 g

Art.No.*	Art.No.		Seite *page*
126.020.020	**270.006**	G1/8" AG	17
	270.018	G1/8" IG	18

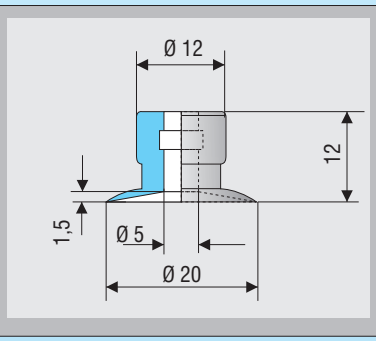

Art. No. 126.020.005._*	NBR (sw), Si (tr), NR (sw)	1,5 mm	1,0 g

Art.No.*	Art.No.		Seite *page*
126.020.005	**270.015**	G1/8" IG	18
	270.194	G1/4" AG	19

* Bei Bestellung bitte gewünschtes Material angeben (siehe Seite 27).
** When ordering, please indicate desired material (see page 27).*
* Précisez le matériel souhaité a la commande (voir page 27).

Flachsauger
Flat suction cups
Ventouses plates

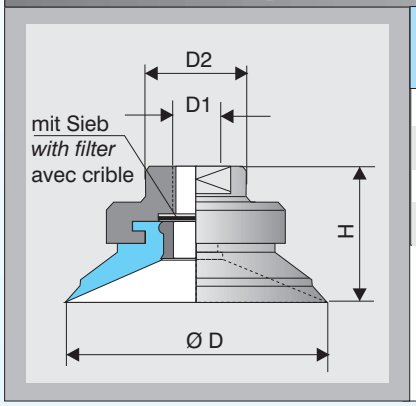

Art.No.*	Material *Material* Matériel			Ø D	D1	D2	H	Ersatzsauger *Spare Cup* Vent. de rechange
120.020.006	NBR (sw), Si (tr),	2,5 mm	3,5 g	22	M 5	G 1/8"	16	102.020.095
120.030.013		3,5 mm	4,4 g	32	M 5	G 1/8"	18	102.030.096
120.040.076		4,0 mm	10,6 g	42	G 1/8"	---	21	102.040.094
120.050.078		6,5 mm	23,8 g	52	G 1/8"	---	26	102.050.097

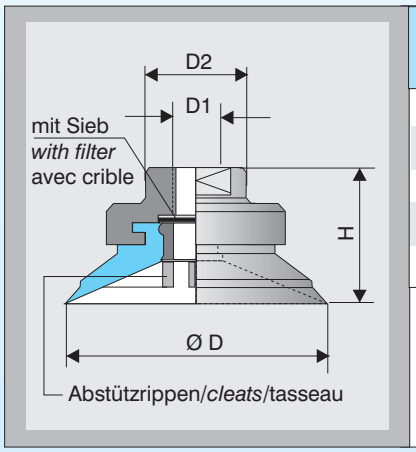

Art.No.*	Material *Material* Matériel			Ø D	D1	D2	H	Ersatzsauger *Spare Cup* Vent. de rechange
123.020.003	NBR (sw), Si (tr),	0,5 mm	3,5 g	22	M 5	G 1/8"	16	125.020.004
123.025.010		1,0 mm	4,5 g	28	M 5	G 1/8"	17	125.025.007
123.030.019		1,5 mm	5,0 g	32	M 5	G 1/8"	18	125.030.010
123.040.028		2,0 mm	11,0 g	42	G 1/8"	---	21	125.040.013
123.050.034		3,0 mm	24,0 g	52	G 1/8"	---	26	125.050.017

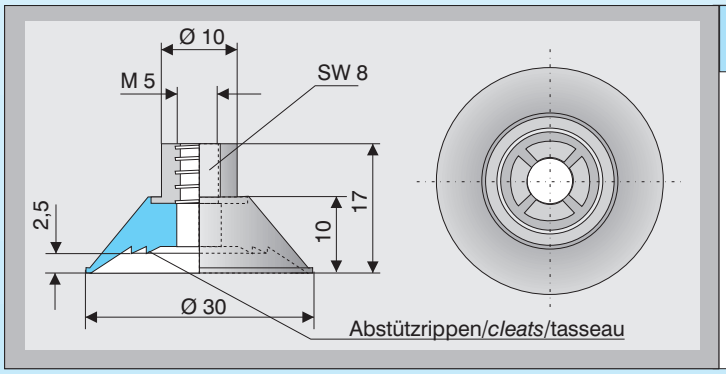

Art. No. 150.030.031._*	Si (r), PUR (bg), CR (sw)	2,5 mm	3,5 g

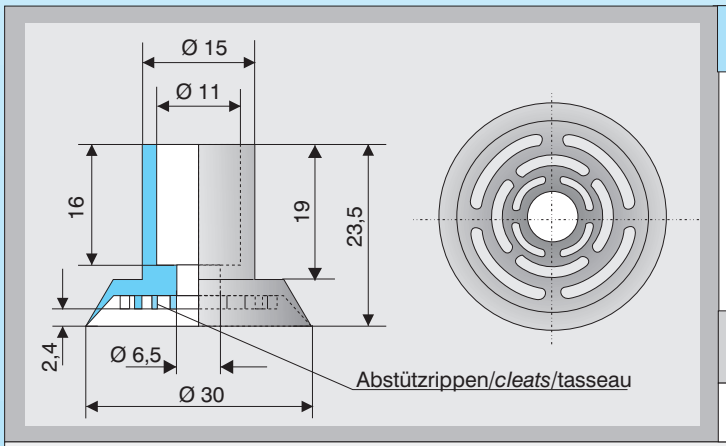

Art. No. 104.030.009._*	NBR (sw), Si (w), Si (tr), NR (sw)	2,4 mm	3,0 g

Saugerträger
Support for suction cup
Porteur pour ventouse

Art. No. 50.043
(Seite/*page* 23)

Art.No.*	Art.No.		Seite *page*
104.030.009	**270.044** **270.046**	G1/4" AG G1/4" IG	19 19

* Bei Bestellung bitte gewünschtes Material angeben (siehe Seite 27).
* *When ordering, please indicate desired material (see page 27).*
* Précisez le matériel souhaité a la commande (voir page 27).

Flachsauger
Flat suction cups
Ventouses plates

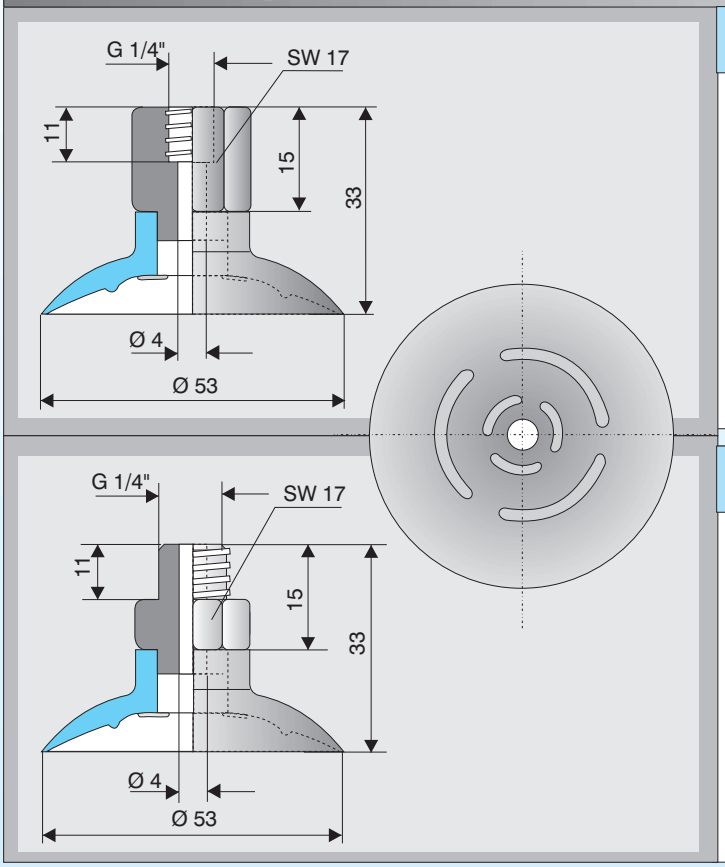

Art. No. 110.053.082._*	NBR (sw), Si (r)	3,0 mm	23,0 g

Art. No. 110.053.083._*	NBR (sw), Si (r)	3,0 mm	19,6 g

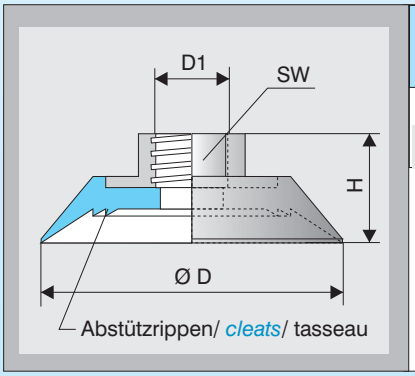

Art.No.*	Material *Material* Matériel			Ø D	D1	H	SW
150.050.032	Si (r), FKM (sw), CR /sw)	4,0 mm	13,6 g	50	G 1/8"	18	14
150.075.033		6,0 mm	38,0 g	75	G 1/4"	24	17

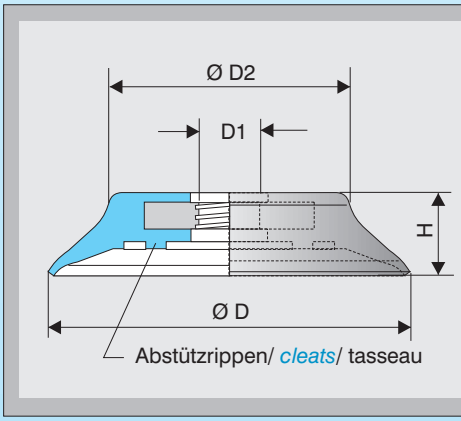

Art.No.*	Material *Material* Matériel			Ø D	D1	D2	H
102.060.303	FKM (g) NBR (sw) Si (tr), PUR (or)	5,0 mm	15,2 g	60	G 1/4"	38,5	16
102.080.304		6,0 mm	52,8 g	80	G 1/4"	53,0	18
102.095.305		6,0 mm	92,0 g	95	G 1/4"	68,0	19

Art.No.*	Art.No.		Seite *page*
102.060.303	**270.078**	G1/4" IG	19
102.080.304	**270.090**	M10 x1,25	20
102.095.305	**270.191**	G1/4" AG	19

Dichtring Ø 17 mm beigelegt
O-ring enclosed
Bague d'étanchéité jointe

* Bei Bestellung bitte gewünschtes Material angeben (siehe Seite 27).
* *When ordering, please indicate desired material (see page 27).*
* Précisez le matériel souhaité a la commande (voir page 27).

Flachsauger
Flat suction cups
Ventouses plates

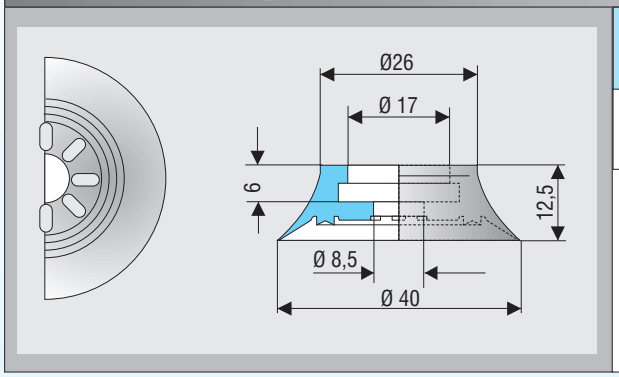

Art.No.*	Material *Material* Matériel			Art.No.		Seite/ page
102.040.357._*	Si (tr) NR-E (b) 40° Sh	3,0 mm	20 g	270.234	G1/8” IG	18

für rauhe und genarbte Oberflächen
for rough and grained surfaces
pour surfaces grainées et rugueux

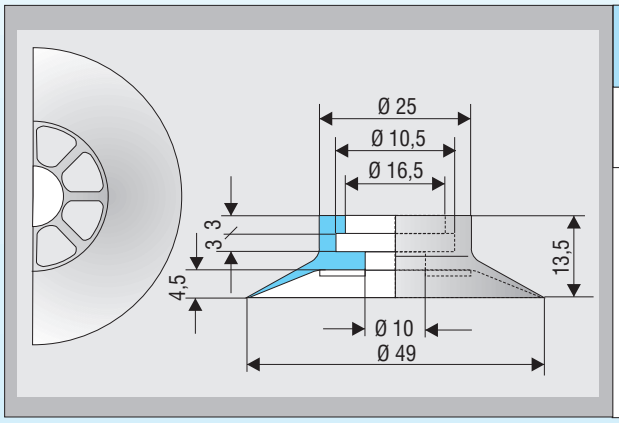

Art.No.*	Material *Material* Matériel			Art.No.		Seite/ page
154.049.068.1	NBR (gr)	3,5 mm	22 g	270.234	G1/8” IG	18

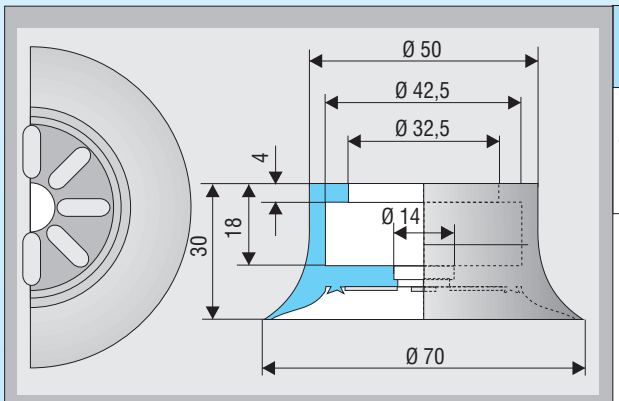

Art.No.*	Material *Material* Matériel			Art.No.		Seite/ page
102.070.234._*	NR (bg), SBR (rb), Si (tr), NR-E (b) 40° Sh	6,0 mm	32 g	270.179	G1/4” IG	19

für rauhe und genarbte Oberflächen
for rough and grained surfaces
pour surfaces grainées et rugueux

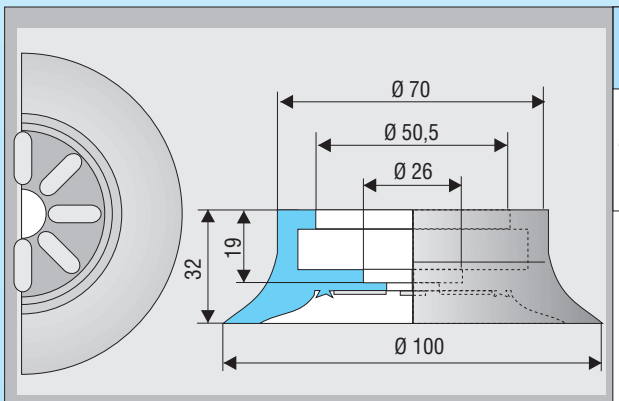

Art.No.*	Material *Material* Matériel			Art.No.		Seite/ page
102.100.269._*	NR (bg), SBR (rb), Si (tr), NR-E (b) 40° Sh	5,0 mm	68 g	270.180 270.180-1/2	G1/4” IG G 1/2” IG	19

für rauhe und genarbte Oberflächen
for rough and grained surfaces
pour surfaces grainées et rugueux

* Bei Bestellung bitte gewünschtes Material angeben (siehe Seite 27).
* *When ordering, please indicate desired material (see page 27).*
* Précisez le matériel souhaité a la commande (voir page 27).

Ovalsauger
Oval *suction cups*
Ventouses ovales

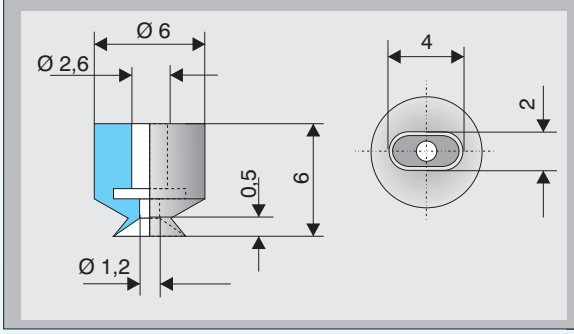

Art. No. 132.4x2.031._*	NBR (sw), Si (tr), Si-AS (sw) PUR (bl)	0,5 mm	0,05 g

Art.No.*	Art.No.		Seite *page*
132.4x2.031	**270.300**	M 5 AG	16

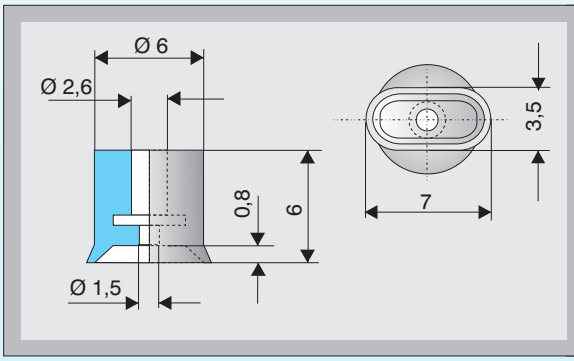

Art. No. 132.7x4.034._*	NBR (sw), Si (tr), Si-AS (sw) PUR (bl)	0,8 mm	0,1 g

Art.No.*	Art.No.		Seite *page*
132.7x4.034	**270.300**	M 5 AG	16

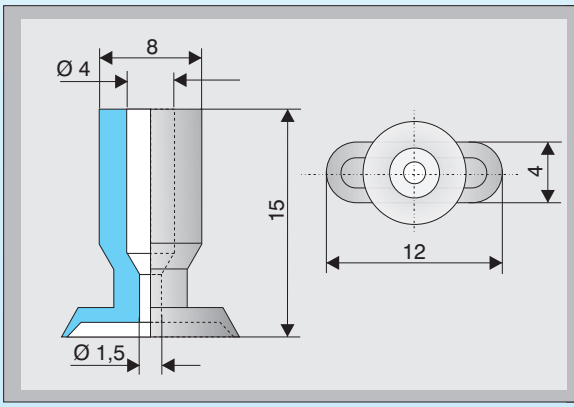

Art. No.132.12x4.004._*	Si (w), Si (tr)	0,5 mm	0,6 g

Art.No.*	Art.No.		Seite *page*
132.12x4.004	**270.104** **270.134**	M 6 AG M 5 AG	16 16

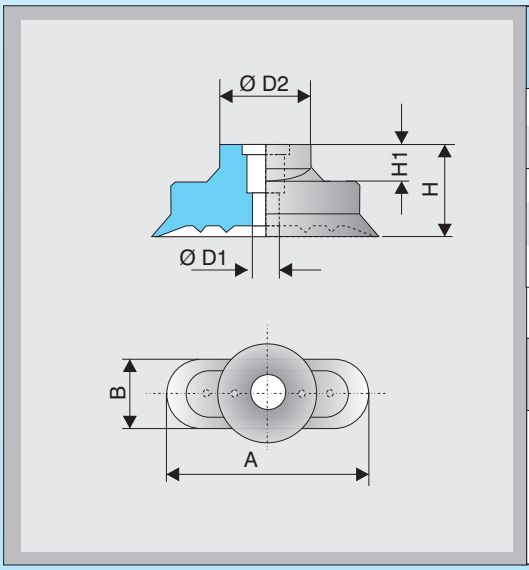

Art.No.*	Material *Material* Matériel			A	B	D1 Ø	D2 Ø	H	H1
132.15x5.008	NBR(sw), Si(r), FKM(sw)	1,0 mm	0,5 g	15	5	1,5	9	11,5	7,0
132.18x6.012	NBR(sw), Si(r), PUR(bg)	1,0 mm	0,5 g	18	6	2,0	9	12,0	7,0
132.24x8.016	NBR(sw), Si(r), NR-E(b)	1,0 mm	1,0 g	24	8	3,0	12	12,0	7,5
132.30x10.018	NBR(sw), Si(r), PUR(bg)	2,0 mm	1,4 g	30	10	3,5	12	12,0	5,0
132.36x12.019	NBR(sw), Si(r), PUR(bg)	2,0 mm	1,8 g	36	12	4,5	12	12,0	5,0

Silikon (tr) auf Anfrage / *Silicone (tr) on request* / Silicone (tr) sur demande

Art.No.*	Art.No.		Seite *page*
132.15x5.008 132.18x6.012 132.24x8.016 132.30x10.018 132.36x12.019	**270.094** **270.095** **270.096**	M 5 AG G1/8" AG G1/8" IG	16 17 18

* Bei Bestellung bitte gewünschtes Material angeben (siehe Seite 27).
* *When ordering, please indicate desired material (see page 27).*
* Précisez le matériel souhaité a la commande (voir page 27).

Ovalsauger
Oval *suction cups*
Ventouses ovales

A

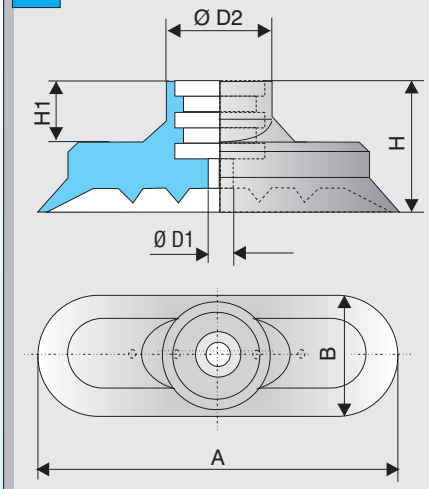

B

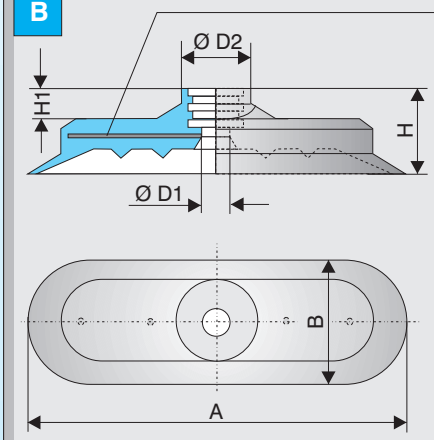

einvulkanisierte Aluminiumverstärkung
vulcanized aluminum reinforcement
vulcanisé avec renforcement d'un tôle d'aluminium

Form	Art.No.*	Material *Material* Matériel			A	B	D1 Ø	D2 Ø	H	H1
A	**132.45x15.020**	NBR(sw), Si(r), PUR(bg)	3,0 mm	4,2 g	45	15	4,0	17	21	14
A	**132.60x20.022**	NBR(sw), Si(r), PUR(bg)	4,0 mm	9,0 g	60	20	4,0	17	21	10
A	**132.75x25.023**	NBR(sw), Si(r)	4,0 mm	15,0 g	75	25	4,0	18	22	8
B	**132.85x28.024**	NBR(sw), Si(r)	4,0 mm	20,0 g	85	28	7,5	18	22	8
B	**132.100x35.26**	NBR(sw), Si(r)	4,0 mm	32,0 g	100	35	7,5	18	22	8

Silikon (tr) auf Anfrage /*Silicone (tr) on request* / Silicone (tr) sur demande

Art.No.*	Art.No.		Seite *page*
132.45x15.020 132.60x20.022 132.75x25.023 132.85x28.024 132.100x35.26	**270.097** **270.098**	G1/4" AG G1/4" IG	19 19

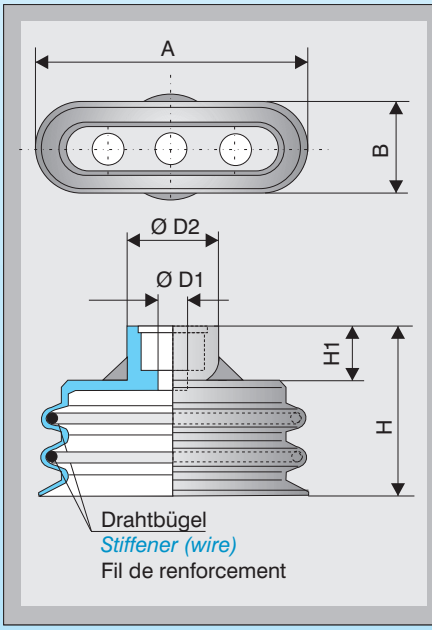

Art.No.*	Material *Material* Matériel			A	B	D1 Ø	D2 Ø	H	H1
138.25x8.002	NBR (sw) Si (r)	7,0 mm	2,0 g	25	8	2,5	10,0	18,5	6,0
138.45x15.003		8,5 mm	7,0 g	45	15	5,0	17,5	28,5	9,5
138.75x25.004		10,5 mm		75	25	6,0	17,7	34,5	9,5

Art.No.*	Art.No.		Seite *page*
138.25x8.002	**270.094** **270.095** **270.096**	M5 AG G 1/8" AG G 1/8" IG	16 17 18
138.45x 15.003 138.75x 25.004	**270.097** **270.098**	G1/4" AG G1/4" IG	19 19

* Bei Bestellung bitte gewünschtes Material angeben (siehe Seite 27).
* *When ordering, please indicate desired material (see page 27).*
* Précisez le matériel souhaité a la commande (voir page 27).

Balgensauger
Bellows suction cups
Ventouses à soufflets

mit 1 1/2 Falten
with 1 1/2 folds
avec 1 1/2 plis

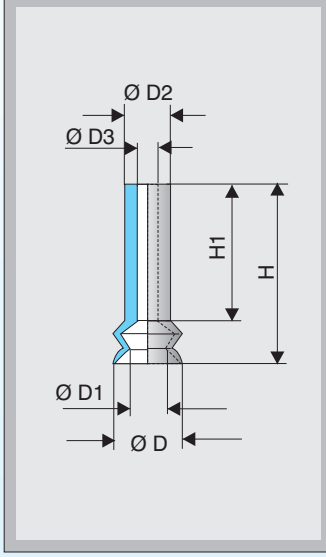

Art.No. 23.005.095.V

Vinyl (bl)	2,0 mm	0,8 g

Ø D	Ø D1	Ø D2	Ø D3	H	H1
4,5	2,5	3	1,5	13	9

Art.No.	270.001 M 5 AG	Seite/*page* 1

Art.No. 23.005.181._*

NBR (sw) Si (tr) PUR (ge) FKM (g)	2,0 mm	0,8 g

Ø D	Ø D1	Ø D2	Ø D3	H	H1
5	2	3	1,5	13	9,5

Art.No.	270.001 M 5 AG	Seite/*page* 16

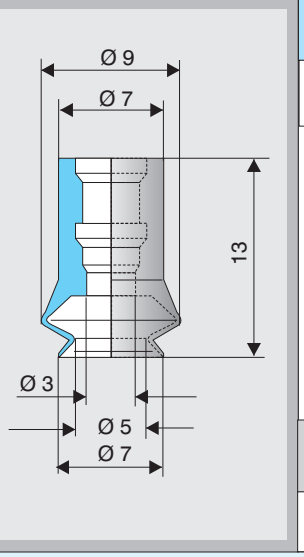

Art. No. 21.007.096._*

NBR (sw) Si (tr)	2,0 mm	0,4 g

Art.No.		Seite *page*
270.104	M 6 AG	16
270.317	M 5 AG	16

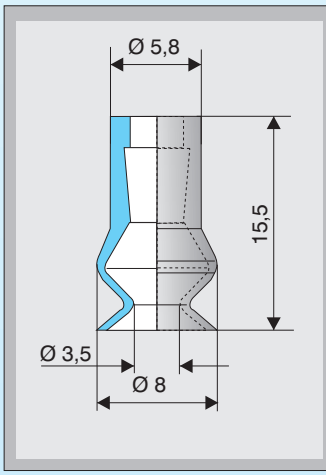

Art. No. 23.008.057.2

Si (tr) Si-AS (sw)	3,5 mm	0,4 g

Art.No.		Seite *page*
270.104	M 6 AG	16
270.134	M 5 AG	16

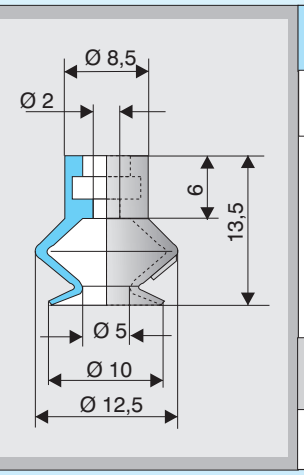

Art. No. 23.010.123._*

NBR (sw), Si (tr) Si-AS (sw) PUR (bl), CR (sw)	4,0 mm	0,6 g

Art.No.		Seite *page*
270.009	G1/8" AG	17
270.301	M 5 AG	16

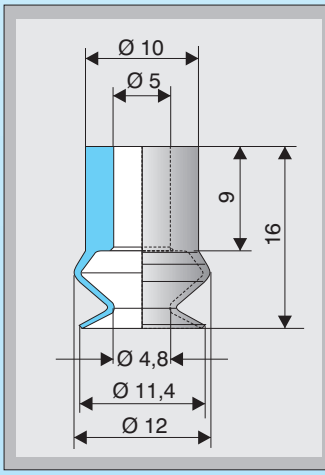

Art. No. 23.011.008._*

NBR (sw) Si (tr)	4,5 mm	0,8 g

Art.No.		Seite *page*
270.003	G1/8" AG	17
270.013	M 5 AG	16
270.103	M 6 AG	16

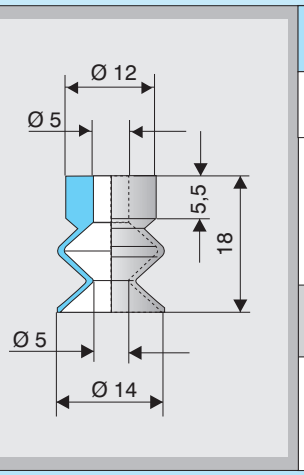

Art.No. 23.014.010._*

NBR (sw) Si (r), NR-E (b), PUR(b), FKM(g)	8,0 mm	1,2 g

Art.No.		Seite *page*
270.003	G1/8" AG	17
270.013	M 5 AG	16
270.103	M 6 AG	16
270.110	G1/8" IG	18

* Bei Bestellung bitte gewünschtes Material angeben (siehe Seite 27).
* *When ordering, please indicate desired material (see page 27).*
* Précisez le matériel souhaité a la commande (voir page 27).

Balgensauger
Bellows suction cups
Ventouses à soufflets

mit 1 1/2 Falten
with 1 1/2 folds
avec 1 1/2 plis

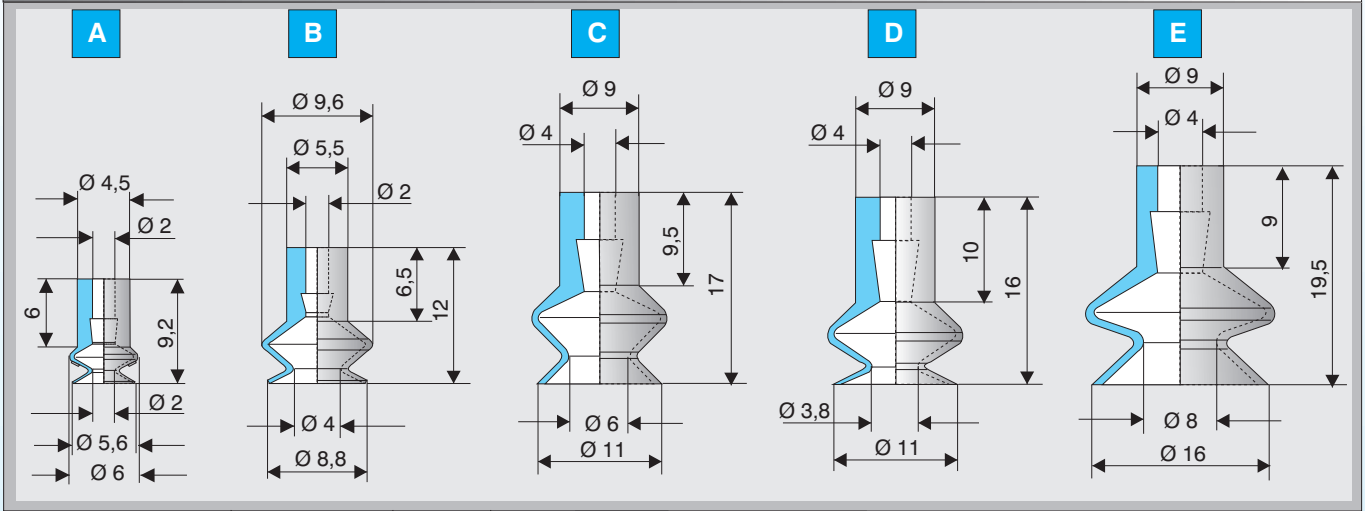

Form	Art.No.*	Material *Material* Matériel			Art.No.		Seite *page*
A	23.005.178	NBR (sw), Si (r)	2,0 mm	0,2 g	270.153	M 5 AG	16
B	23.008.166	NBR (sw), Si (r)	3,5 mm	0,2 g			
C	23.011.007	NBR (sw), Si (tr), PUR (or)	5,0 mm	0,6 g	270.003	G1/8" AG	17
D	23.011.138.2r	Si (r)	4,0 mm	1,0 g	270.015	G1/8" IG	18
					270.104	M 6 AG	16
E	23.016.015	Si (tr), PUR (or), CR (sw)	7,0 mm	1,4 g	270.134	M 5 AG	16

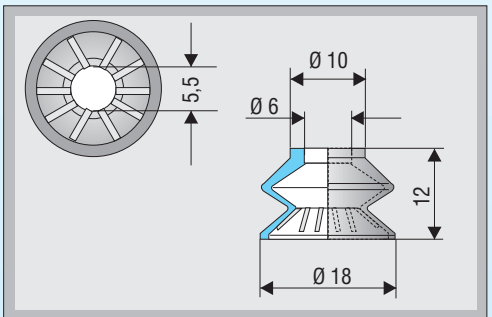

Art.No.*	Material *Material* Matériel	mm	g
23.018.082._*	Si (tr), Si-E (tr) NR-E (bl), CR (sw)	5,5	0,6

Art.No.	Art.No.		Seite *page*
23.018.082._*	270.077	G1/8" AG	17
	270.105	M 6 AG	16

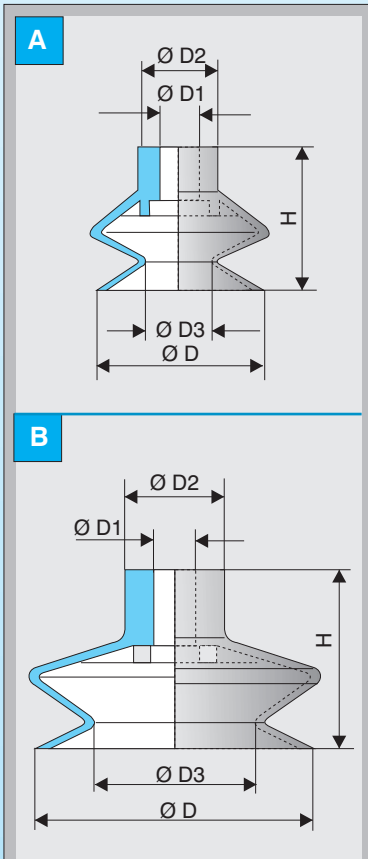

Form	Art.No.*	Material *Material* Matériel		
A	23.016.016	NBR (sw), Si (tr) HNBR (wr)	6 mm	1,2 g
	23.022.028		5 mm	2,0 g
	23.033.039		12 mm	7,0 g
B	23.043.096	NBR (sw), Si (tr) HNBR (wr)	12 mm	10,0 g
	23.053.033		11 mm	19,0 g

Form	Abmessungen *Dimensions* Dimensions	D Ø	D1 Ø	D2 Ø	D3 Ø	H
A	23.016.016	16	5	10	7,0	19
	23.022.028	22	5	10	10,6	19
	23.033.039	33	8	18	17,0	27
B	23.043.096	43	8	18	21,0	28
	23.053.033	53	8	18	33,0	34

Art.No.	Art.No.		Seite *page*
23.016.016 23.022.028	270.003	G1/8" AG	17
	270.013	M 5 AG	16
	270.015	G1/8" IG	18
	270.103	M 6 AG	16
23.033.039 23.043.096 23.053.033	270.190	G1/4" AG	19
	270.192	G1/4" IG	20

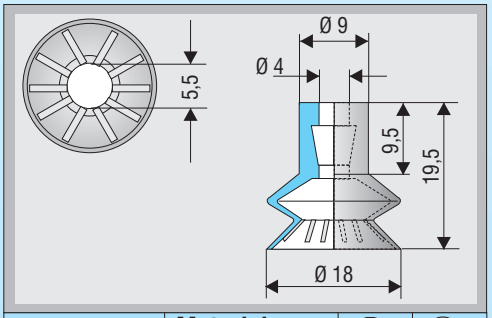

Art.No.*	Material *Material* Matériel	mm	g
23.018.175._*	Si (tr), NR-E (bl)	5,5	2,0

Art.No.	Art.No.		Seite *page*
23.018.175._*	270.003	G 1/8" AG	17
	270.015	G 1/8" IG	18
	270.134	M 5 AG	16
	270.104	M 6 AG	16

* Bei Bestellung bitte gewünschtes Material angeben (siehe Seite 27).
** When ordering, please indicate desired material (see page 27).*
* Précisez le matériel souhaité a la commande (voir page 27).

Balgensauger
Bellows suction cups
Ventouses à soufflets

mit 1 1/2 Falten
with 1 1/2 folds
avec 1 1/2 plis

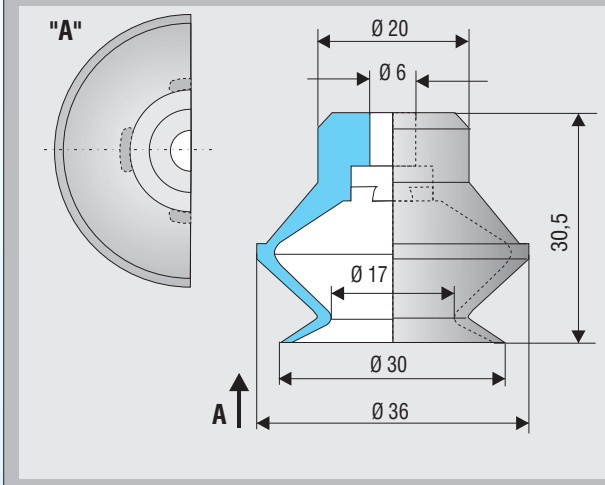

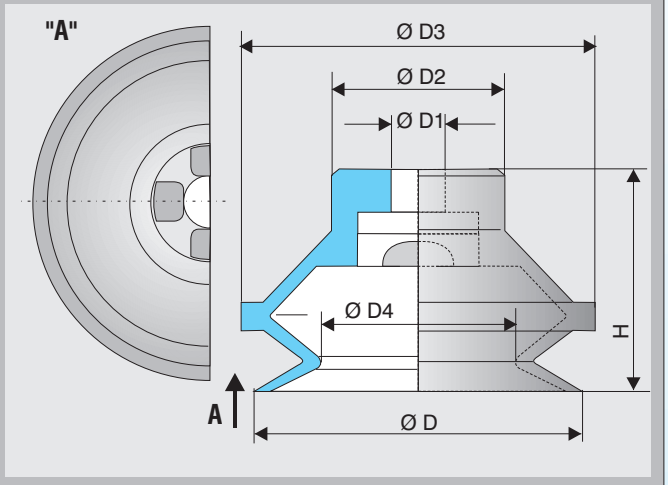

Art. No. 23.030.125._*

NBR (sw) Si (tr), PUR (bl)	9 mm	9,0 g	Art.No. 270.019

Art.No.		Seite *page*
270.019	G1/8" IG	18
270.030	G1/8" AG	17
270.274	G1/4" AG	19
270.275	G1/4" IG	20
270.312	M 6 AG	16

Art.No.*			D Ø	D1 Ø	D2 Ø	D3 Ø	D4 Ø	H
23.040.126	10 mm	15 g	40	6	25,0	46,0	23,0	30,5
23.050.127	10 mm	23 g	50	8	28,5	59,5	32,4	36,5

Art.No.*	Art.No.		Seite *page*
23.040.126	**270.019**	G1/8" IG	18
	270.030	G1/8" AG	17
	270.274	G1/4" AG	19
	270.275	G1/4" IG	20
	270.312	M 6 AG	16
23.050.127	**270.303+270.314**	G1/8" AG	18 + 17
	270.304+270.314	G1/4" AG	19 + 17
	270.307+270.314	G1/8" IG	18 + 17
	270.308+270.314	G1/4" IG	20 + 17

Material
Material
Matériel

NBR(sw), Si(tr), PUR (bl)

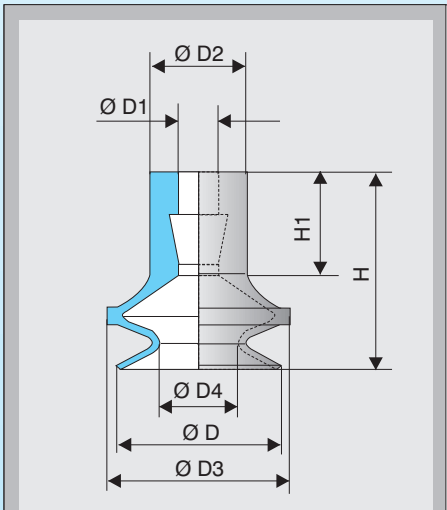

Art.No.	Material *Material* Matériel			Art.No.		Seite *page*
23.011.173.2	Si (tr)	3,5 mm	1,0 g	**270.003**	G1/8" AG	17
23.016.174.2	Si (tr)	5,0 mm	1,2 g	**270.134**	M 5 AG	16

Art.No.	D Ø	D1 Ø	D2 Ø	D3 Ø	D4 Ø	H	H1
23.011.173.2	11	4	9	12,0	3,5	16	10
23.016.174.2	16	4	9	17,5	8,0	19	10

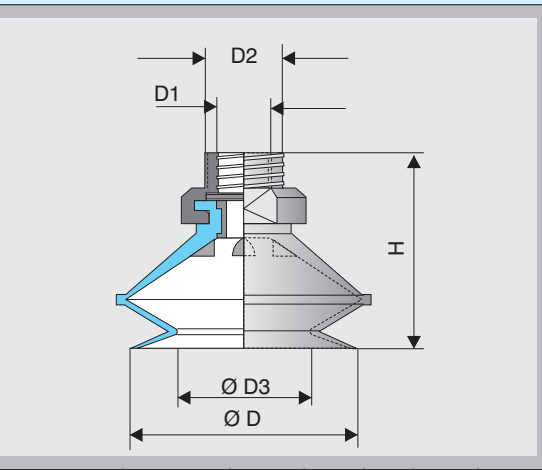

Art.No.*	Material *Material* Matériel			D Ø	D1	D2	D3 Ø	H
22.020.020	NBR(sw), Si(tr), CR (sw) PUR (or)	9 mm	6 g	20	M 5	G 1/8"	11	26,5
22.030.033		13 mm	8 g	30	M 5	G 1/8"	17	34,5
22.040.045		9 mm	18 g	40	G 1/8"	---	23	35,0

* Bei Bestellung bitte gewünschtes Material angeben (siehe Seite 27).
** When ordering, please indicate desired material (see page 27).*
* Précisez le matériel souhaité a la commande (voir page 27).

Balgensauger
Bellows suction cups
Ventouses à soufflets

mit 1 1/2 + 2 1/2 Falten
with 1 1/2 + 2 1/2 folds
avec 1 1/2 + 2 1/2 plis

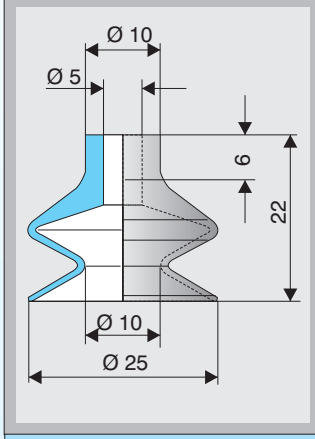

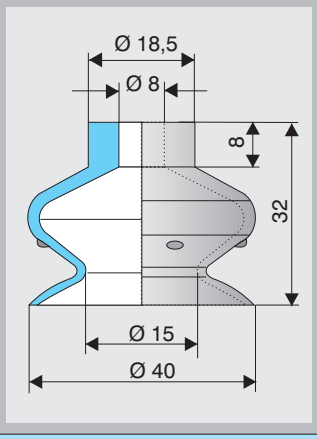

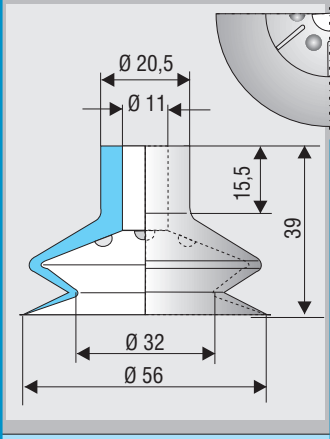

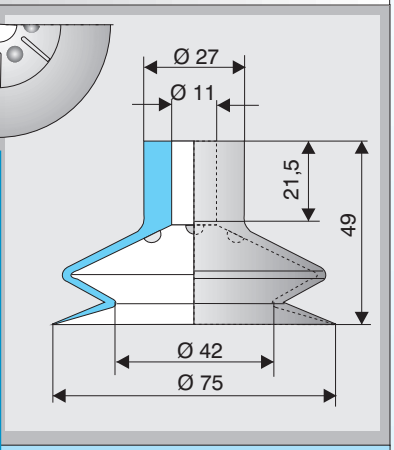

Art. No. 23.025.137._*			Art. No. 23.040.042._*			Art. No. 23.056.150.2			Art. No. 23.075.151.2		
NBR (sw) Si (tr) NR (gr)	9,0 mm	2,4 g	NBR (sw) Si (r), PUR (b) EPDM (g) NR-E (bg)	13,0 mm	13,5 g	Si (tr)	16 mm	16 g	Si (tr)	20 mm	35 g

Art.No.		Seite *page*	Art.No.		Seite *page*	Art.No.		Seite *page*	Art.No.		Seite *page*
270.003	G1/8" AG	17	**270.092**	G 1/8" IG	18	**270.049-1**	G1/4" AG	19	**270.049-1**	G1/4" AG	19
270.013	M 5 AG	16	**270.093**	G 1/8" AG	17						
270.103	M 6 AG	16	**270.248**	G 1/4" IG	20						
270.109	G1/8" IG	18	**270.249**	G 1/8" AG	19						

Balgensauger
Bellows suction cups
Ventouses à soufflets

mit 2 1/2 Falten
with 2 1/2 folds
avec 2 1/2 plis

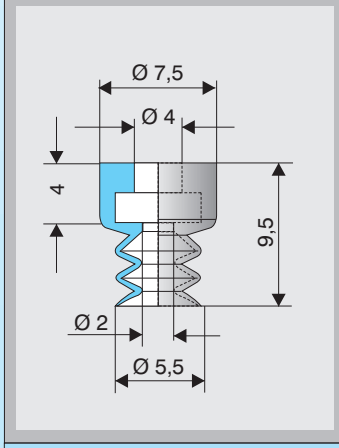

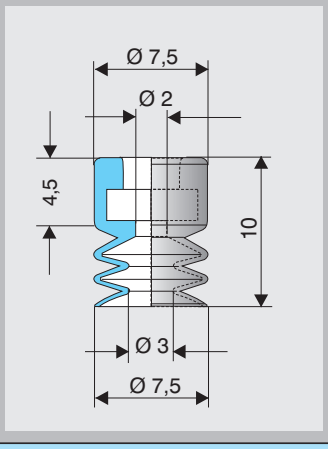

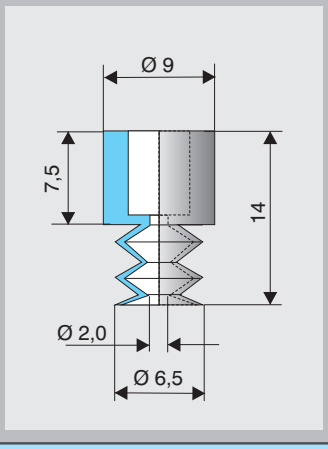

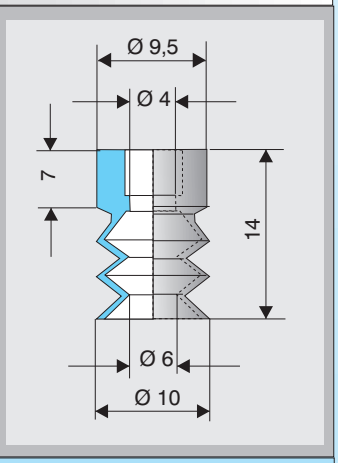

Art.No. 21.005.088.*_			Art. No. 21.007.089._*			Art. No. 21.006.001._*			Art. No. 21.010.078._*		
NBR (sw) Si (tr)	3,0 mm	0,4 g	NBR (sw) Si (tr), PUR (bl)	3,0 mm	0,6 g	NBR (sw), Si (tr), Vinyl (bl), FKM (g) EPDM (gr)	3,5 mm	0,3 g	Si (r),Si (tr) PUR (bg) FKM (g)	4,0 mm	0,8 g

Art.No.		Seite *page*
270.010	M 5 AG	16

Art.No.		Seite *page*
270.013	M 5 AG	16
270.103	M 6 AG	16
270.134	M 5 AG	16

* Bei Bestellung bitte gewünschtes Material angeben (siehe Seite 27).
** When ordering, please indicate desired material (see page 27).*
* Précisez le matériel souhaité a la commande (voir page 27).

Balgensauger
Bellows suction cups
Ventouses à soufflets

mit 2 1/2 Falten
with 2 1/2 folds
avec 2 1/2 plis

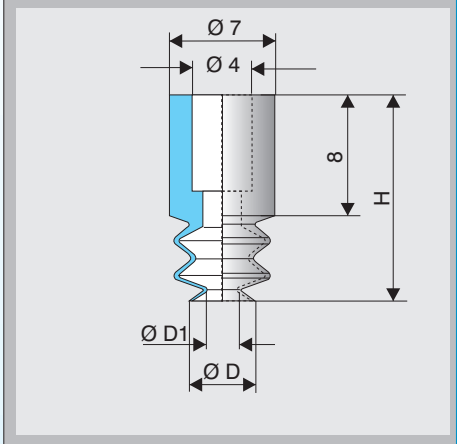

Art.No.*	Material *Material* Matériel	D Ø	D1	H
21.004.083	Si (tr)	4,2	2,2	14,0
21.005.058	NBR (sw), Si (tr)	5,0	1,3	13,5

Art.No.*			Art.No.		Seite *page*
21.004.083	3,0	0,4	**270.104**	M 6 AG	16
21.005.058	3,0	0,4	**270.134**	M 5 AG	16

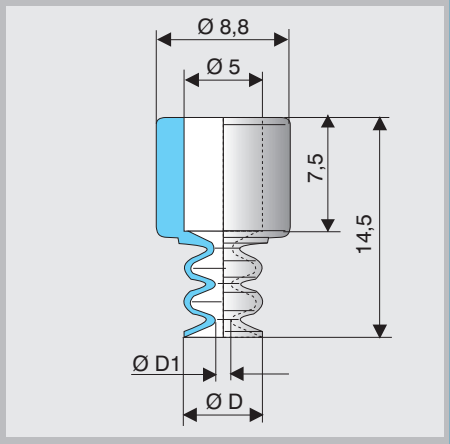

Art.No.	D Ø	D1		
21.005.086.2	5,0	1,0	3,5 mm	0,4 g
21.006.087._*	6,5	2,6	3,5 mm	0,4 g

	Material/*Material*/Matériel
21.005.086.2	Si (tr)
21.006.087._*	Si (tr), NBR (sw) 65° Sh

Art.No.		Seite *page*
270.024	M 5 AG	16
270.103	M 6 AG	16

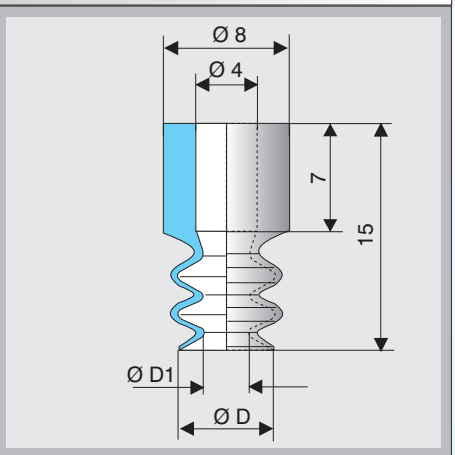

Art.No.*	D Ø	D1		
21.006.093	6	3	3,5 mm	0,4 g
21.008.094	8	4	4,0 mm	0,4 g
21.011.095	11	4	5,0 mm	1,0 g

Material / *Material* / Matériel:
NBR (sw), Si (tr), NR (sw)

Art.No.		Seite *page*
270.003	G1/8" AG	17
270.015	G1/8" IG	18
270.104	M 6 AG	16
270.134	M 5 AG	16

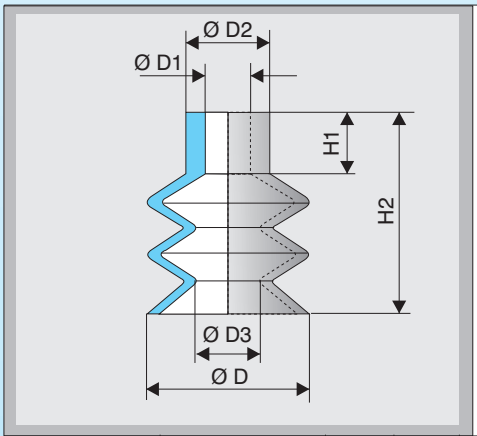

Art.No.*	Material *Material* Matériel	D Ø	D1 Ø	D2 Ø	D3 Ø	H	H1
21.014.053	Si (tr), CR (sw)	14	3,9	8,0	5,0	18	5,0
21.018.013	NBR (sw), Si (tr) NR (sw)	18	5,0	9,5	7,5	23	7,5
21.020.015	NBR (sw), Si (tr) Si-E (tr), NR (sw)	20	5,0	10,0	9,0	22	5,5

Art.No.*			Art.No.		Seite *page*
21.014.053	9 mm	1,0 g	**270.005**	M 5 IG	16
21.018.013	9 mm	2,3 g	**270.013**	M 5 AG	16
21.020.015	11 mm	2,2 g	**270.134**	M 5 AG	16

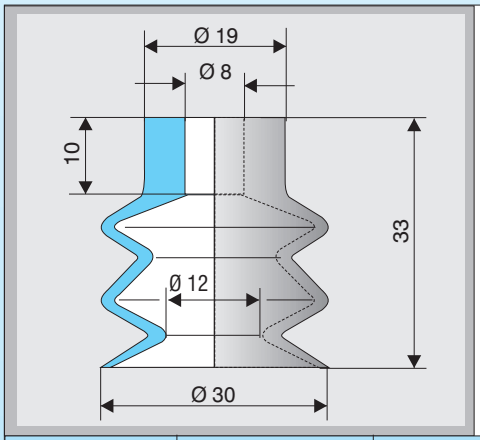

Art.No.*	Material *Material* Matériel		
21.030.019	NBR (sw), Si (r) NR-E (bg), PUR (bl) EPDM (g)	13,0	8,0

Art.No.		Seite *page*
270.092	G 1/8" IG	18
270.093	G 1/8" AG	17
270.248	G 1/4" IG	20
270.249	G 1/4" AG	19

* Bei Bestellung bitte gewünschtes Material angeben (siehe Seite 27).
** When ordering, please indicate desired material (see page 27).*
* Précisez le matériel souhaité a la commande (voir page 27).

Balgensauger
Bellows suction cups
Ventouses à soufflets

mit 2 1/2 Falten und mehr
with 2 1/2 folds and more
avec 2 1/2 plis et de plus

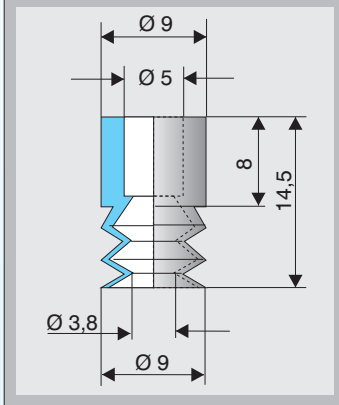

Art.No. 21.009.002._*

NBR (sw), Si (tr), Si-E (tr), NR (gr), PUR (bl), FKM (g), HNBR (wr) | 2,0 mm | 0,6 g

Art.No.		Seite *page*
270.003	G1/8" AG	17
270.013	M 5 AG	16
270.015	G1/8" IG	18
270.103	M 6 AG	16

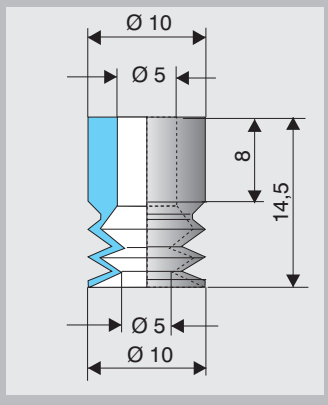

Art. No. 21.010.004._*

NBR (sw), Si (r), PUR (bg), NR (bg) | 3,0 mm | 1,0 g

Art.No.		Seite *page*
270.013	M 5 AG	16
270.103	M 6 AG	16
270.109	G1/8" IG	18
270.238	G1/8" AG	18

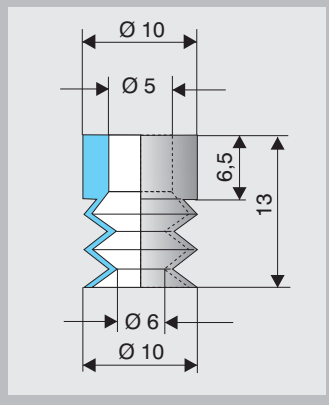

Art. No. 21.010.005._*

NBR (sw) Si (bl) | 4,0 mm | 0,4 g

Art.No.		Seite *page*
270.094	M 5 AG	16
270.095	G1/8" AG	17
270.096	G1/8" IG	18
270.103	M 6 AG	16

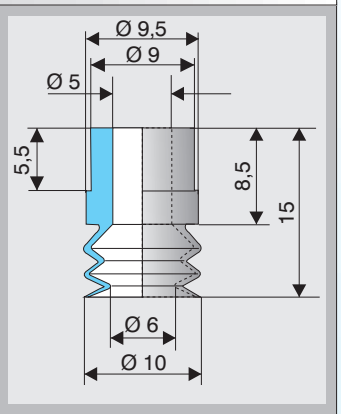

Art. No. 21.010.056._*

Si (bl), Si (r), FKM (g) 70° Sh | 4,0 mm | 0,6 g

Art.No.		Seite *page*
270.013	M 5 AG	16
270.103	M 6 AG	16
270.109	G1/8" IG	18
270.238	G1/8" AG	18

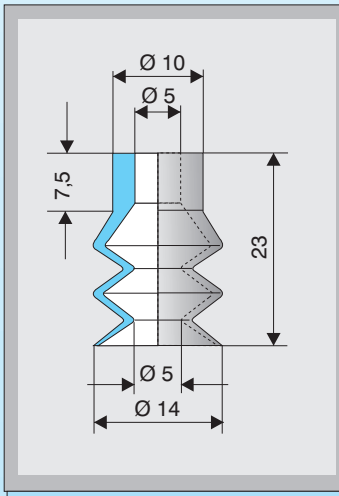

Art.No. 21.014.007._*

NBR (sw) Si (tr), PUR (ge) FKM (g) | 12 mm | 1,2 g

Art.No.		Seite *page*
270.003	G1/8" AG	17
270.013	M 5 AG	16
270.015	G1/8" IG	18
270.103	M 6 AG	16

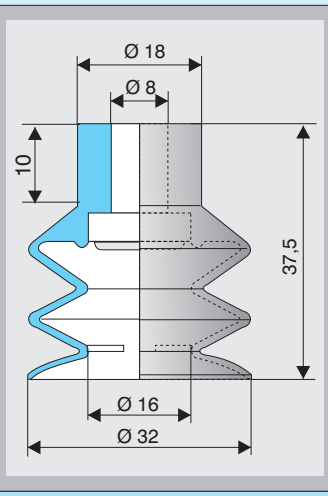

Art. No. 21.032.075._*

NBR (sw) Si (tr), Si-E (tr), PUR (bl), HNBR (wr) | 13 mm | 10 g

Art.No.		Seite *page*
270.114	G1/8" IG	18
270.132	G1/8" AG	17
270.190	G1/4" AG	19
270.192	G1/4" IG	20

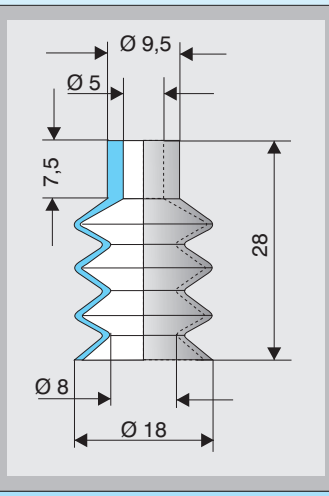

Art. No. 25.018.031._*

NBR (sw) Si (tr) | 14 mm | 2,0 g

Art.No.		Seite *page*
270.109	G1/8" IG	18
270.205	G1/8" AG	17
270.013	M 5 AG	16

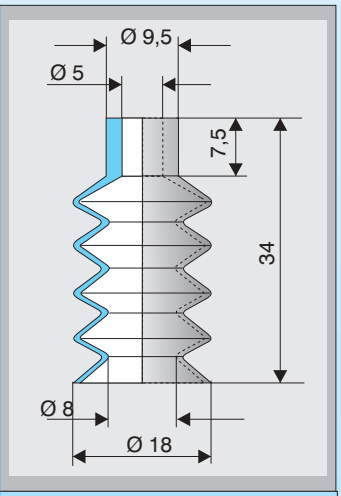

Art. No. 25.018.032._*

Si (tr) | 17 mm | 2,4 g

Art.No.		Seite *page*
270.109	G1/8" IG	18
270.205	G1/8" AG	17
270.013	M 5 AG	16

* Bei Bestellung bitte gewünschtes Material angeben (siehe Seite 27).
** When ordering, please indicate desired material (see page 27).*
* Précisez le matériel souhaité a la commande (voir page 27).

Anschlussteile
Fittings
Raccords

AG = Aussengewinde | *AG = External thread* | AG = filetage mâle
IG = Innengewinde | *IG = Internal thread* | IG = filetage femelle

M 5 AG
M 5 IG
M 6 AG

M 5 AG

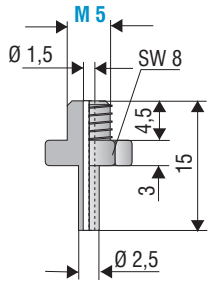

Art. No. 270.001

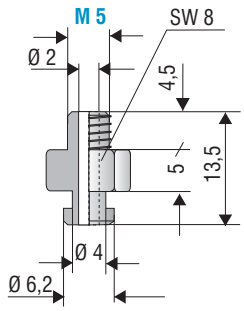

Art. No. 270.010

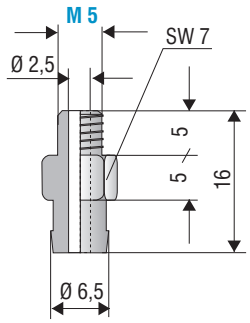

Art.No. 270.013

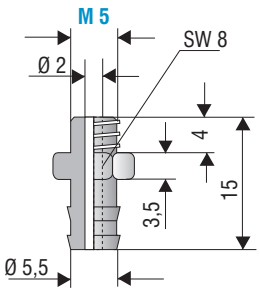

Art. No. 270.024

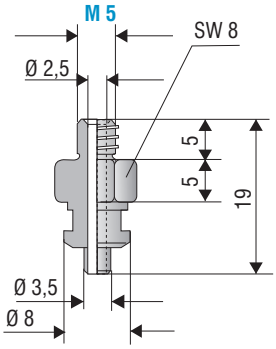

Art. No. 270.037

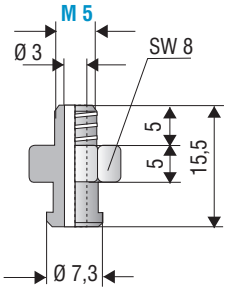

Art. No. 270.094

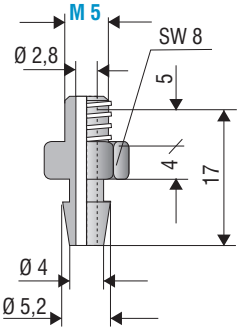

Art. No. 270.134

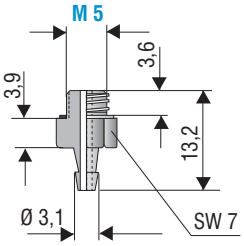

Art. No. 270.153

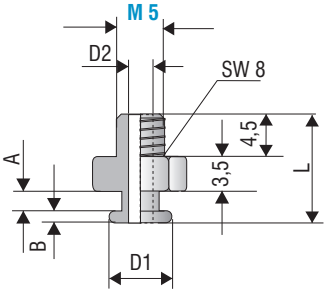

	D1	D2	L	A	B
Art.-No. 270.300	Ø 3	Ø 1,2	10,5	1,5	1,0
270.301	Ø 6	Ø 2,5	12,0	2,0	2,0

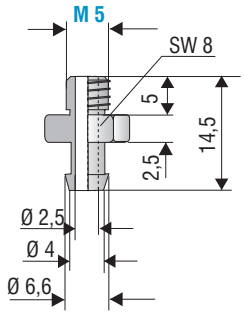

Art. No. 270.317

M 5 IG

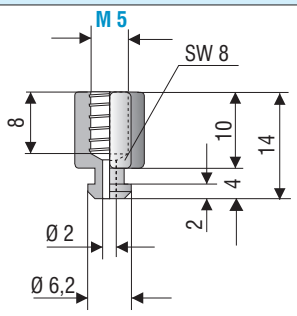

Art. No. 270.005

M 6 AG

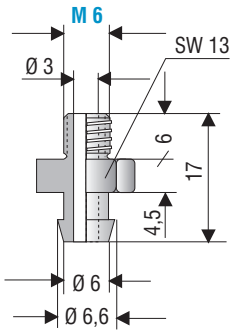

Art. No. 270.103

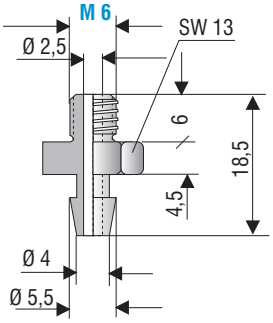

Art. No. 270.104

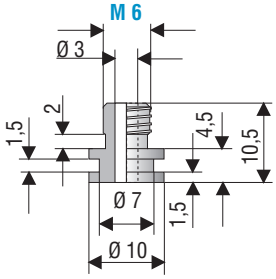

Art. No. 270.105

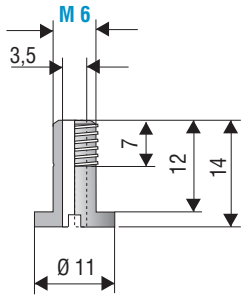

Art. No. 270.312

Anschlussteile
Fittings
Raccords

AG = Aussengewinde | *AG = External thread* | AG = filetage mâle
IG = Innengewinde | *IG = Internal thread* | IG = filetage femelle

M 6 AG
M 8 AG
G 1/8” AG

M 6 AG

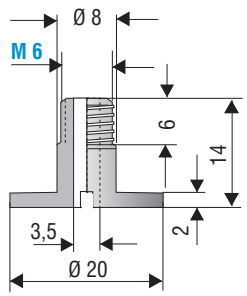

Art. No. 270.314

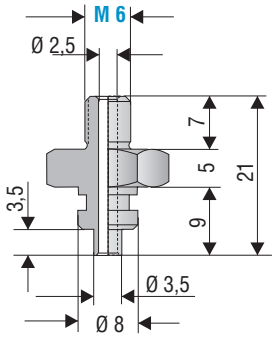

Art. No. 270.373

M 8 AG

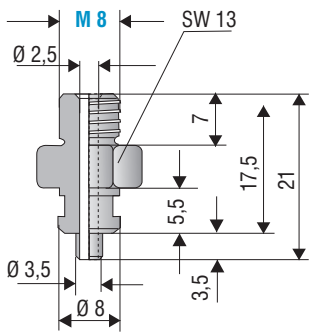

Art. No. 270.374

G 1/8” AG

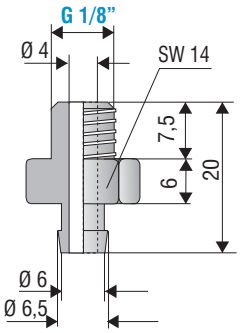

Art. No. 270.003

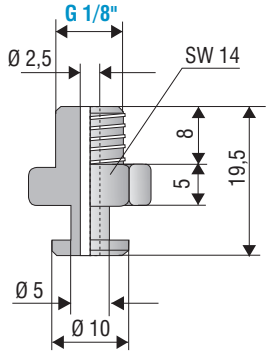

Art. No. 270.006

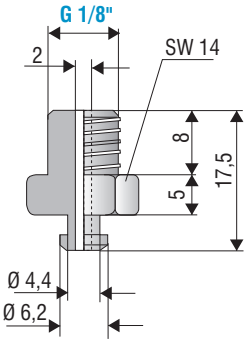

Art.No. 270.009

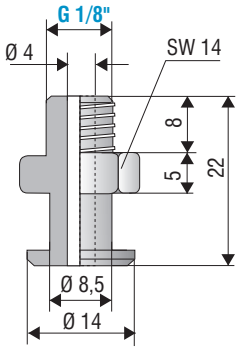

Art. No. 270.012

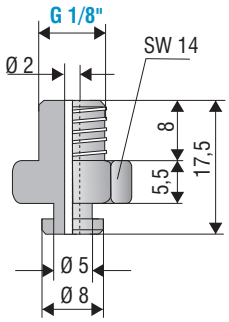

Art. No. 270.021

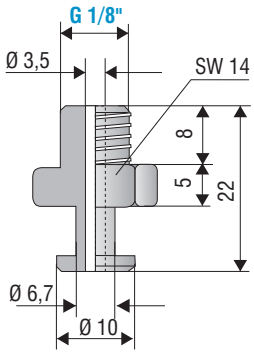

Art. No. 270.030

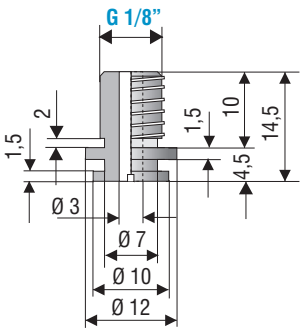

Art. No. 270.077

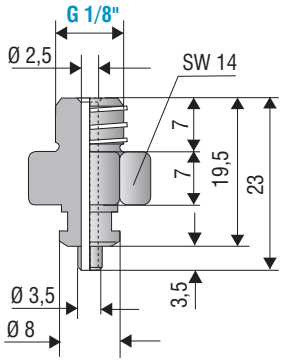

Art. No. 270.085

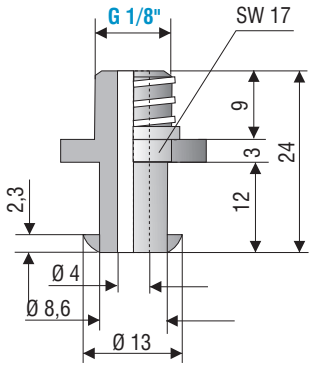

Art. No. 270.093

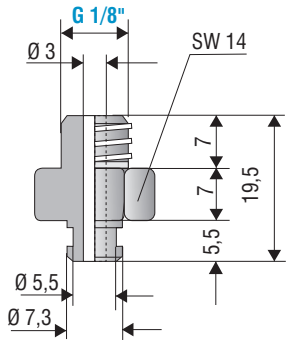

Art. No. 270.095

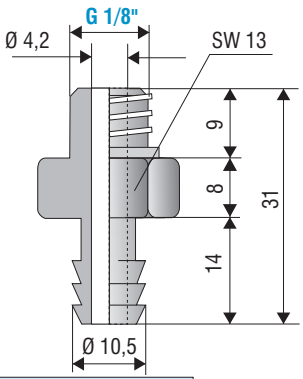

Art. No. 270.132

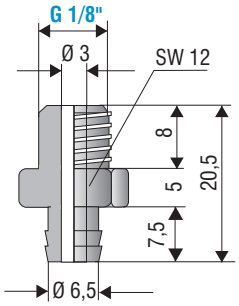

Art. No. 270.205

Anschlussteile
Fittings
Raccords

AG = Aussengewinde | *AG = External thread* | AG = filetage mâle
IG = Innengewinde | *IG = Internal thread* | IG = filetage femelle

G 1/8” AG
G 1/8” IG

G 1/8” AG

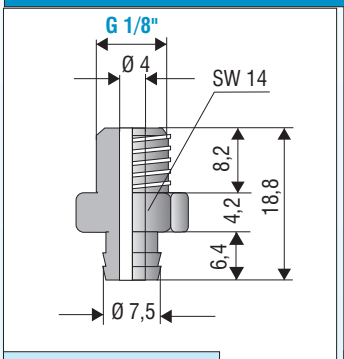

Art. No. 270.238

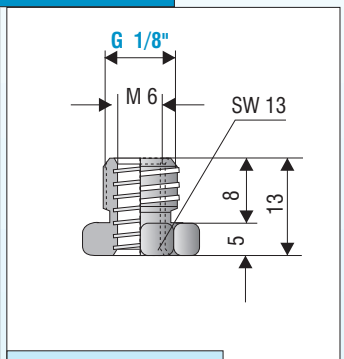

Art. No. 270.303

G 1/8” IG

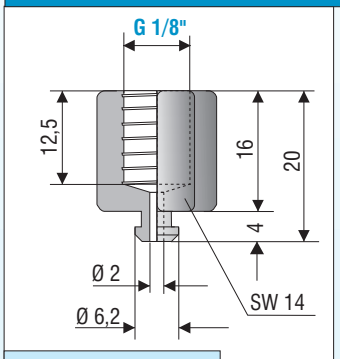

Art. No. 270.007

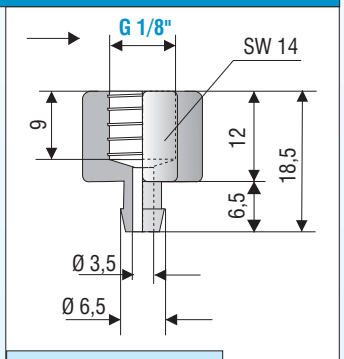

Art. No. 270.015

G 1/8” IG

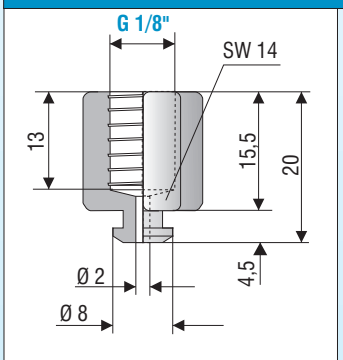

Art. No. 270.017

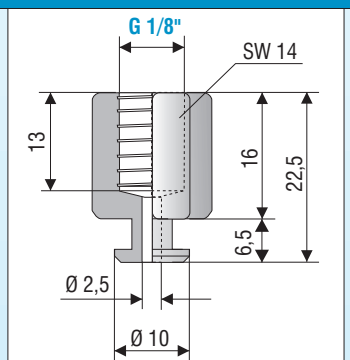

Art. No. 270.018

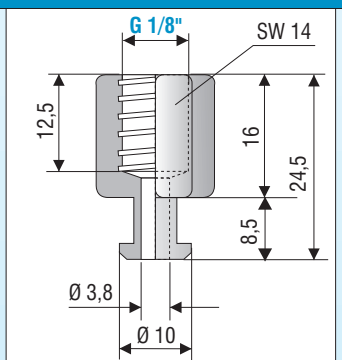

Art. No. 270.019

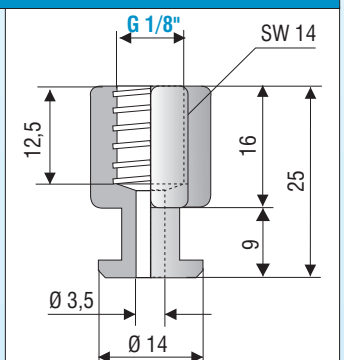

Art. No. 270.020

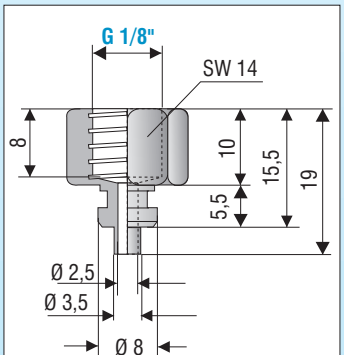

Art. No. 270.086

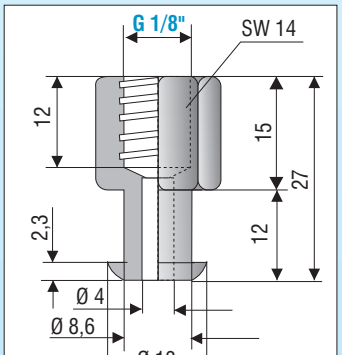

Art. No. 270.092

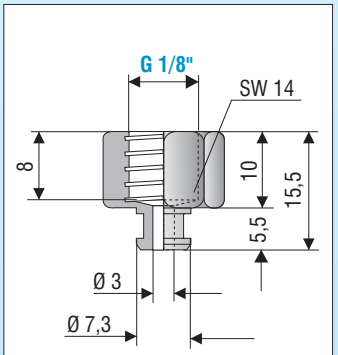

Art.No. 270.096

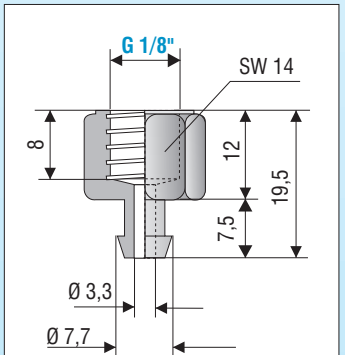

Art. No. 270.109

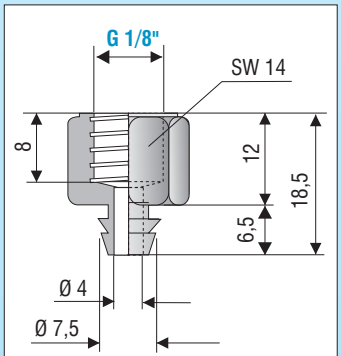

Art. No. 270.110

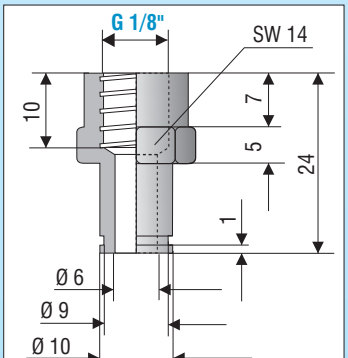

Art. No. 270.114

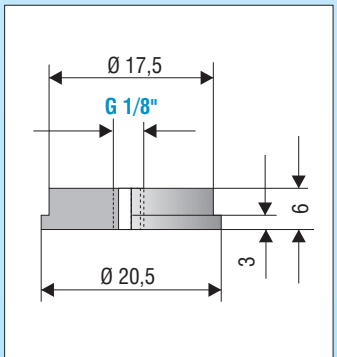

Art. No. 270.234

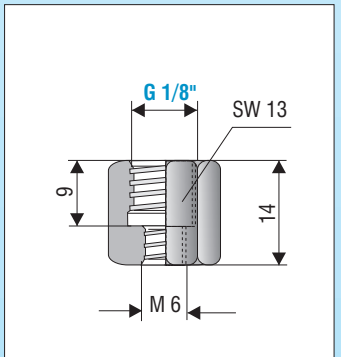

Art. No. 270.307

Anschlussteile
Fittings
Raccords

AG = Aussengewinde | *AG = External thread* | AG = filetage mâle
IG = Innengewinde | *IG = Internal thread* | IG = filetage femelle

G 1/4" AG
G 1/4" IG

G 1/4" AG

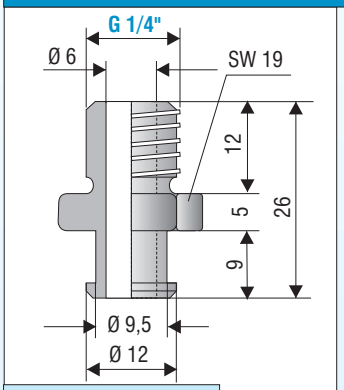

Art. No. 270.034

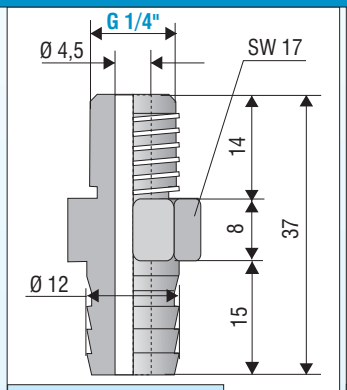

Art. No. 270.044

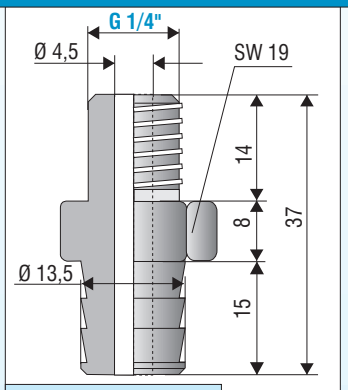

Art. No. 270.049-1

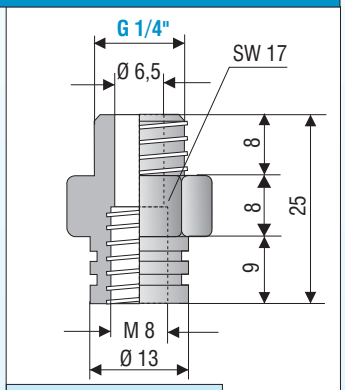

Art. No. 270.097

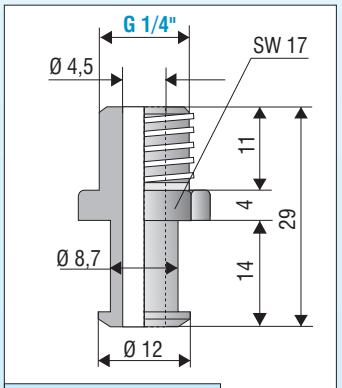

Art. No. 270.190

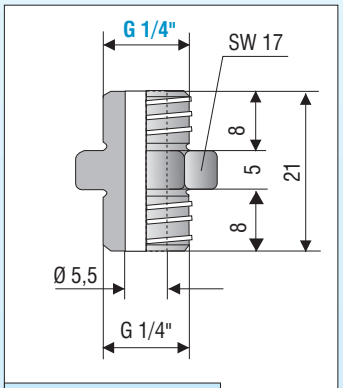

Art. No. 270.191

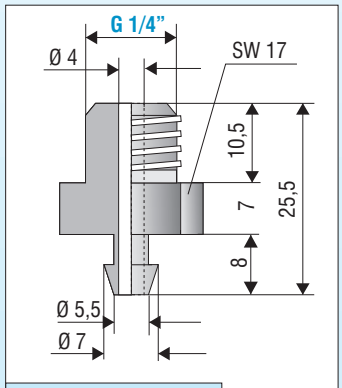

Art. No. 270.194

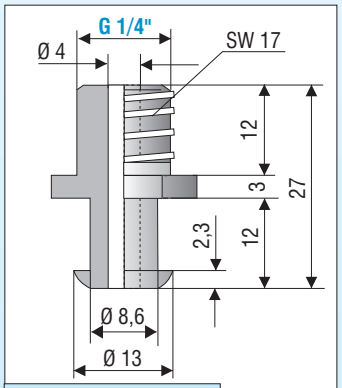

Art. No. 270.249

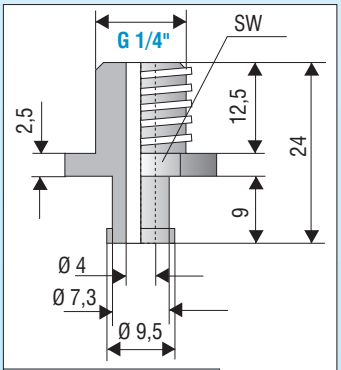

Art. No. 270.274

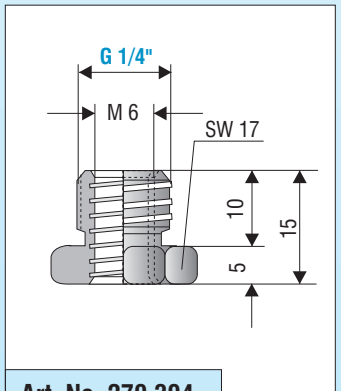

Art. No. 270.304

G 1/4" IG

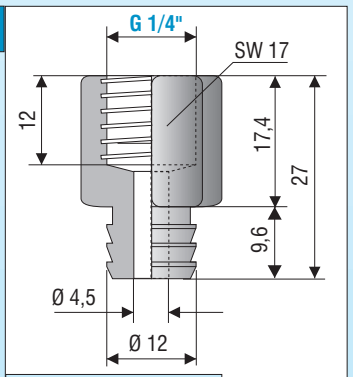

Art. No. 270.046

G 1/4" IG

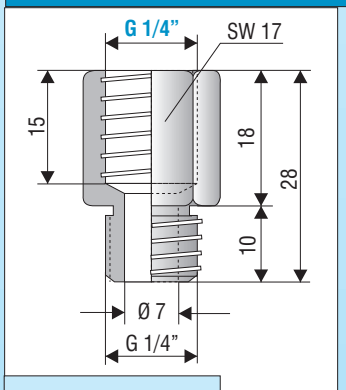

Art. No. 270.078

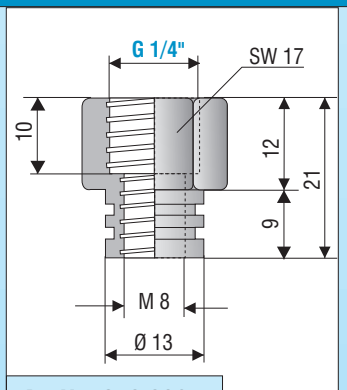

Art.No. 270.098

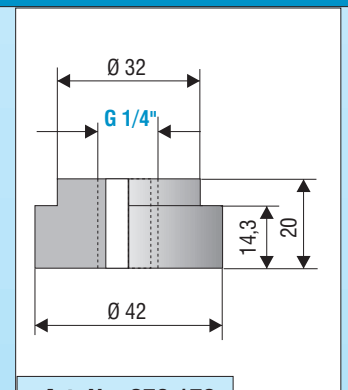

Art. No. 270.179

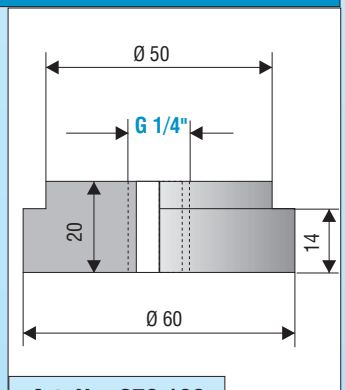

Art. No. 270.180

Anschlussteile
Fittings
Raccords

AG = Aussengewinde | *AG = External thread* | AG = filetage mâle
IG = Innengewinde | *IG = Internal thread* | IG = filetage femelle

G 1/4” IG
M 10 x 1,25 IG

G 1/4” IG

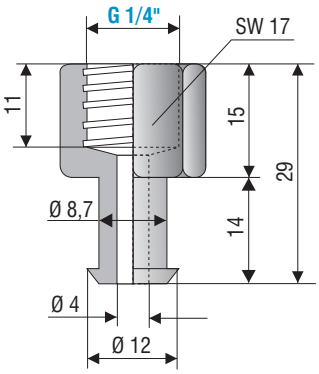

Art. No. 270.192

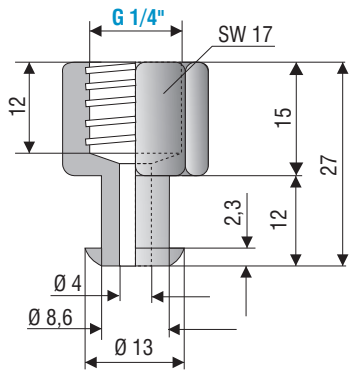

Art. No. 270.248

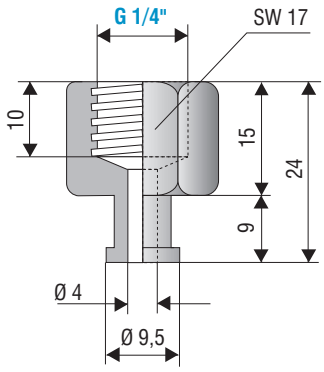

Art. No. 270.275

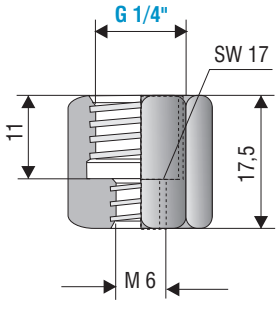

Art. No. 270.308

M 10 x 1,25 IG

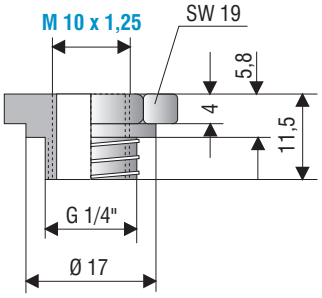

Art. No. 270.090

Saugerträger ..... geordnet nach Saugeranschluß-Maß
Supports for suction cups ... classified by suction-cup connection
Porteurs pour ventouses ..... presentés selon les dimensions de raccordement de ventouses

M 5 AG
M 5 IG

M 5 AG

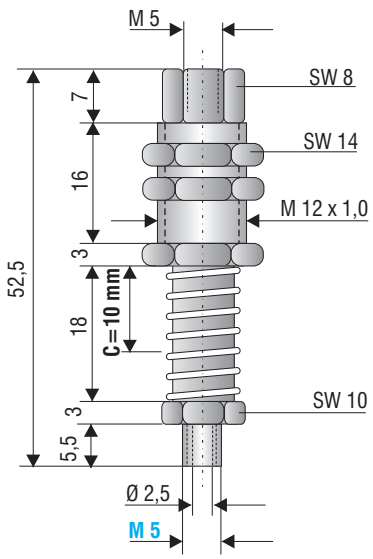

C = Hub
Travel
Course

Art. No. 50.121

M 5 AG

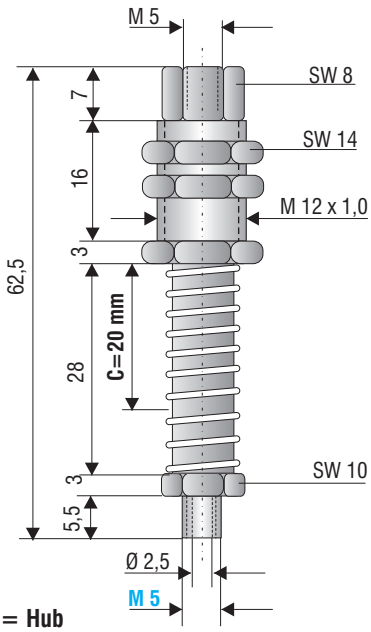

C = Hub
Travel
Course

Art. No. 50.122

M 5 IG

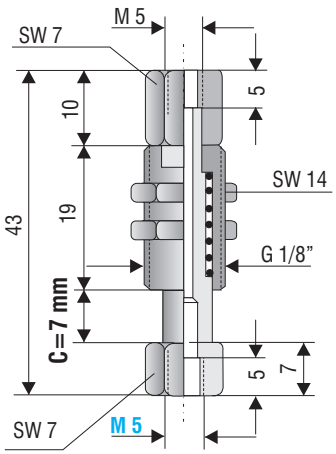

C = Hub
Travel
Course

Art. No. 50.120

M 5 IG

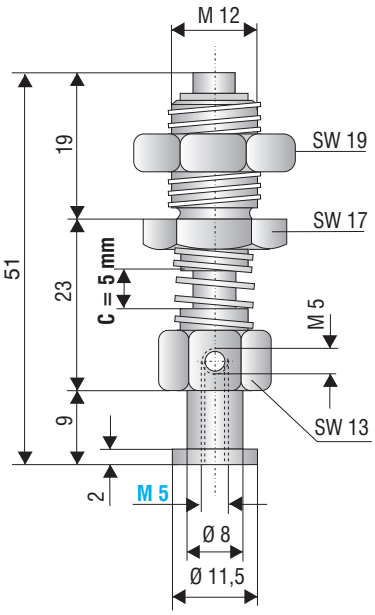

C = Hub
Travel
Course

Art. No. 50.005

Passende **Flach**sauger
*Suitable **flat** suction cups*
Ventouses **plates** adaptés

107.020.014
102.020.041 + 270.311
102.025.047
102.030.053
102.035.056
102.040.061

Passende **Balgen**sauger
*Suitable **bellows** suction cups*
Ventouses à **sofflets** adaptés

27.016.001
27.020.002
23.020.026
23.025.030
23.030.037
23.030.125
23.040.045
23.040.126

Alle Sauger steckbar
All suction cups
Toutes les ventouses

M 5 IG

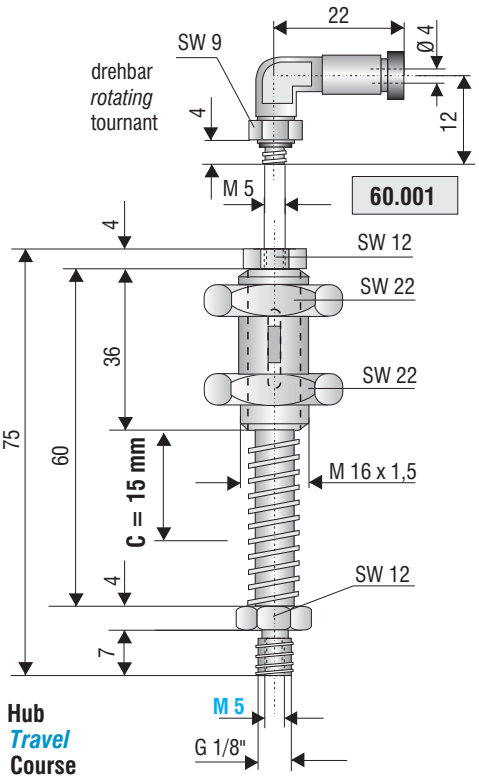

C = Hub
Travel
Course

Art. No. 50.066

verdrehgesichert
torsionally rigid
bloqué contre torsion

Saugerträger ..... geordnet nach Saugeranschluß-Maß
Supports for suction cups ... classified by suction-cup connection
Porteurs pour ventouses ..... presentés selon les dimensions de raccordement de ventouses

M 6 IG
G 1/8" AG

M 6 IG

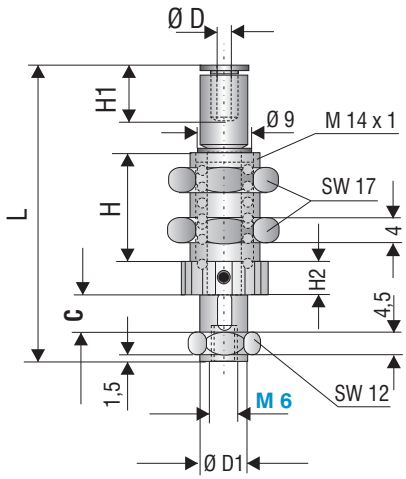

C = Hub
Travel
Course

verdrehgesichert
torsionally rigid
bloqué contre torsion

Art. No.	C	Ø D	Ø D1	L	H	H1	H2
50.085	6	6	10,0	52	20	11,5	6
50.086	6	4	10.0	51	20	10,5	6
50.128	10	6	10,5	59	20	11,5	8
50.129	15	6	10,5	69	25	11,5	8
50.130	20	6	10,5	85	34	11,5	10

M 6 IG

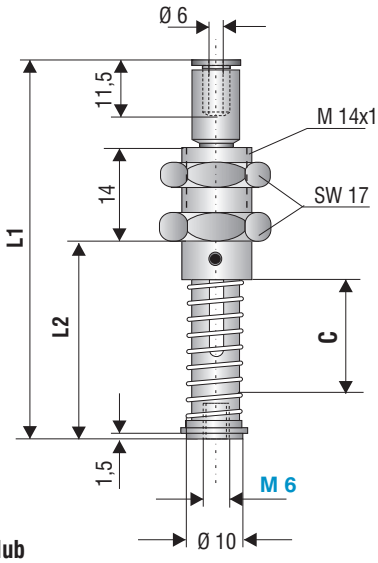

C = Hub
Travel
Course

verdrehgesichert
torsionally rigid
bloqué contre torsion

Art. No.	C	L1	L2
50.095	20	62	30
50.096	30	74	42
50.097	40	88	56
50.098	50	100	68

G 1/8" AG

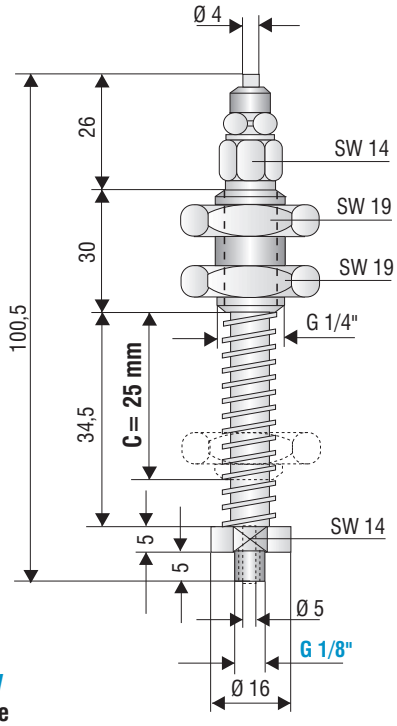

C = Hub
Travel
Course

Art. No. 50.048

G 1/8" AG

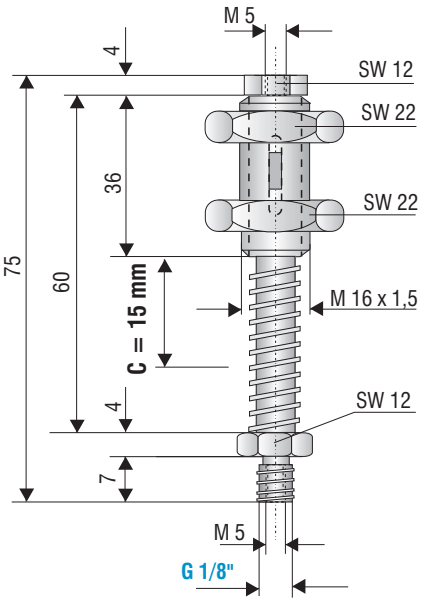

C = Hub
Travel
Course

verdrehgesichert
torsionally rigid
bloqué contre torsion

Art. No. 50.066

Saugerträger ..... geordnet nach Saugeranschluß-Maß
Supports for suction cups ... classified by suction-cup connection
Porteurs pour ventouses ..... presentés selon les dimensions de raccordement de ventouses

G 1/8” AG

G1/8" AG

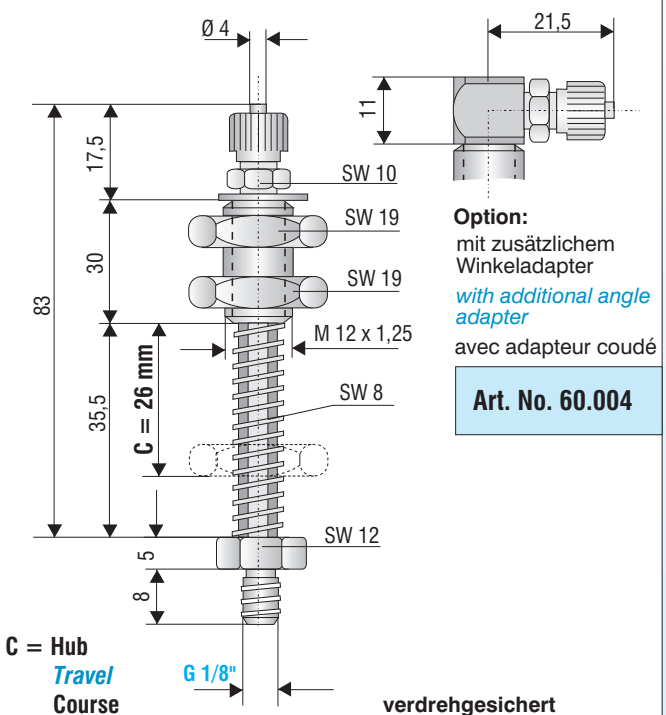

C = Hub
Travel
Course

Art. No. 60.004

Art. No. 50.055

G1/8" AG

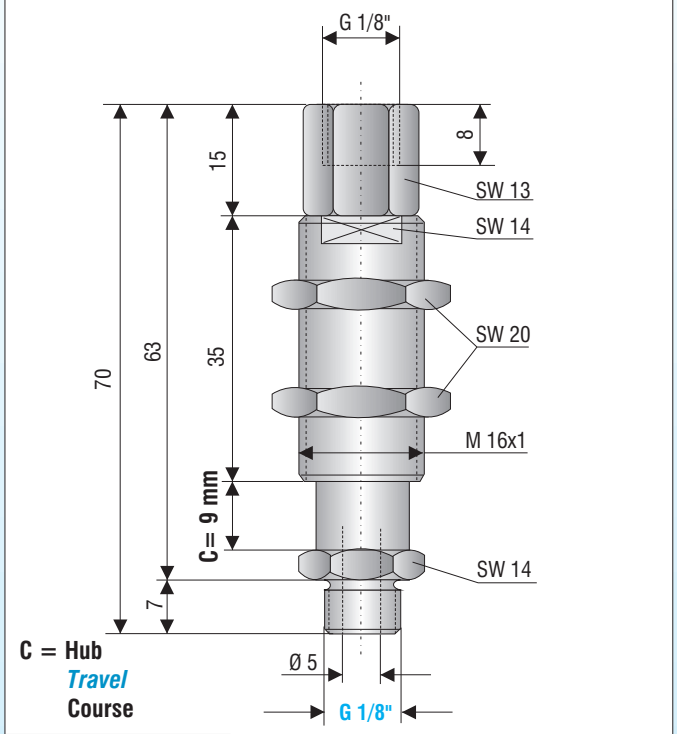

C = Hub
Travel
Course

Art. No. 50.140

G1/8" AG

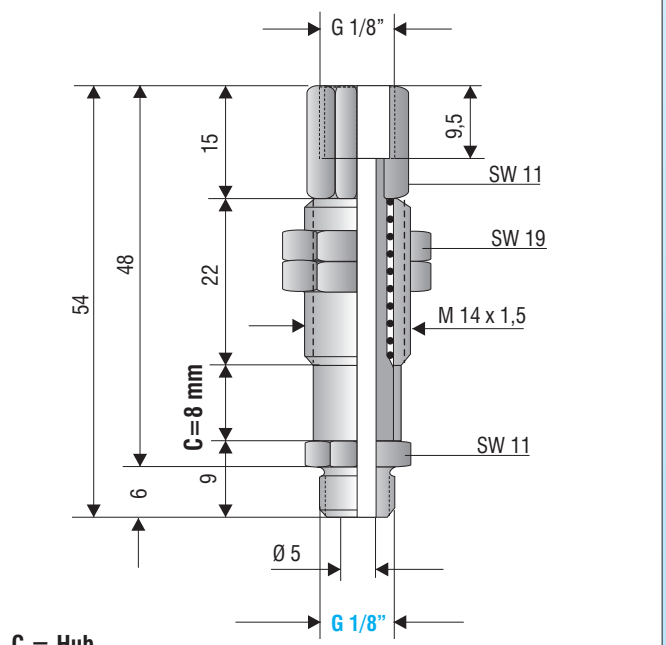

C = Hub
Travel
Course

Art. No. 50.123

G1/8" AG

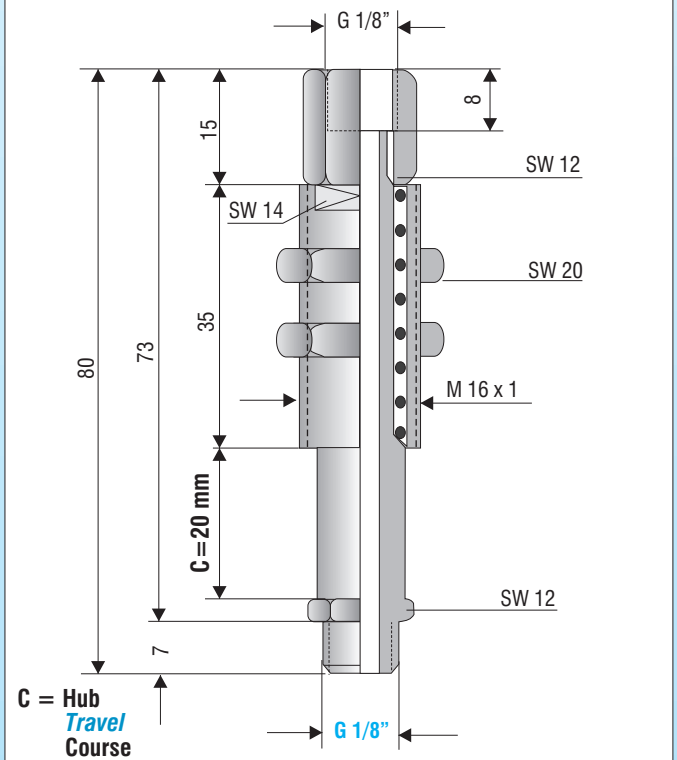

C = Hub
Travel
Course

Art. No. 50.124

Saugerträger ..... geordnet nach Saugeranschluß-Maß
Supports for suction cups ... classified by suction-cup connection
Porteurs pour ventouses .... presentés selon les dimensions de raccordement de ventouses

G 1/8” IG
G 1/4” AG

G1/8" IG

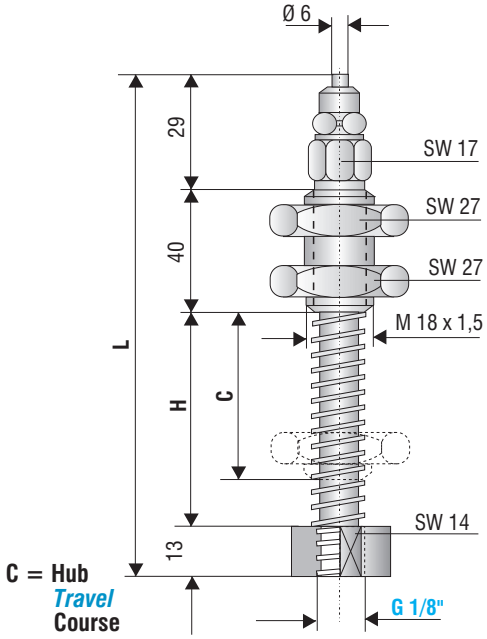

Art. No.	C	H	L
50.028	25	37	119
50.029	55	77	159
50.030	80	110	192

G1/8" IG

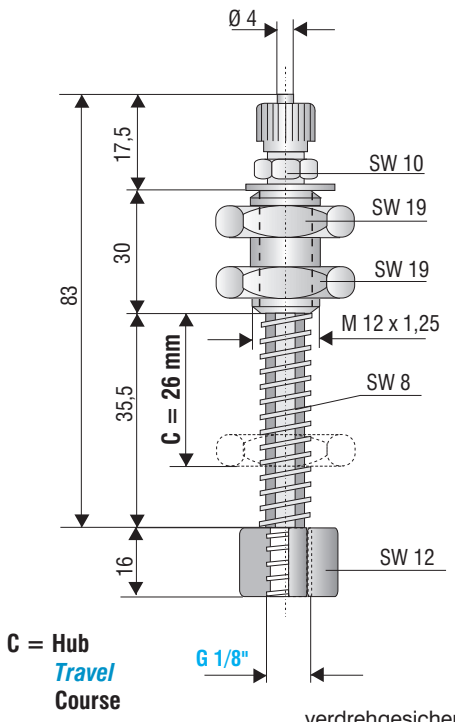

verdrehgesichert
torsionally rigid
bloqué contre torsion

Art. No. 50.056

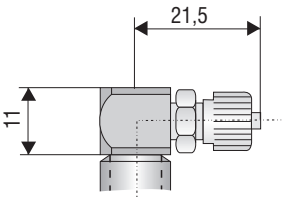

Option:
mit zusätzlichem Winkeladapter
with additional angle adapter
avec adapteur coudé

Art. No. 60.004

G1/4" AG

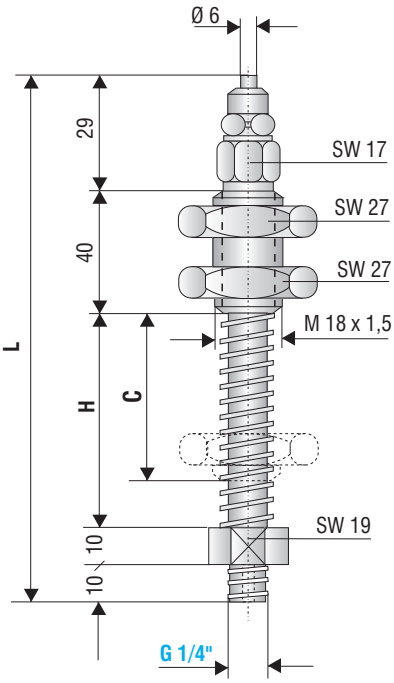

Art. No.	C	H	L
50.015	25	37	126
50.016	55	77	166
50.017	80	110	199

C = Hub
Travel
Course

G1/4" AG

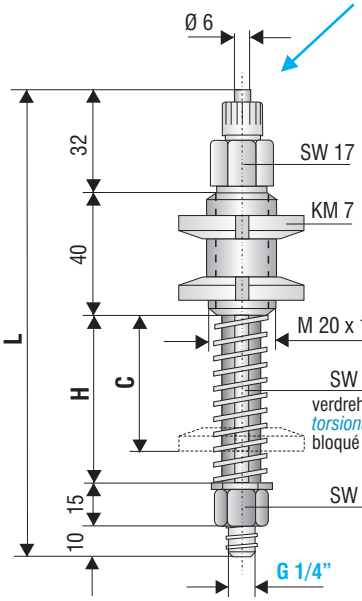

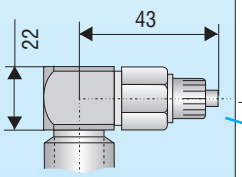

Option:
mit zusätzlichem Winkeladapter
with additional angle adapter
avec adapteur coudé

Art. No. 60.005

Art. No.	H	L	C
50.108	28	125	17
50.109	65	162	45
50.110	95	192	65

C = Hub
Travel
Course

G1/4" AG

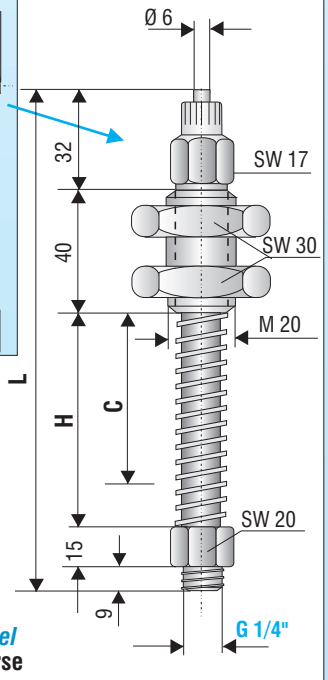

Art. No.	H	L	C
50.131	28	124	17
50.132	65	161	50
50.133	95	191	74

Saugerträger ..... geordnet nach Saugeranschluß-Maß
Supports for suction cups ... *classified by suction-cup connection*
Porteurs pour ventouses ..... presentés selon les dimensions de raccordement de ventouses

G 1/4" IG
Ø 11,5 + Ø 12

G1/4" IG

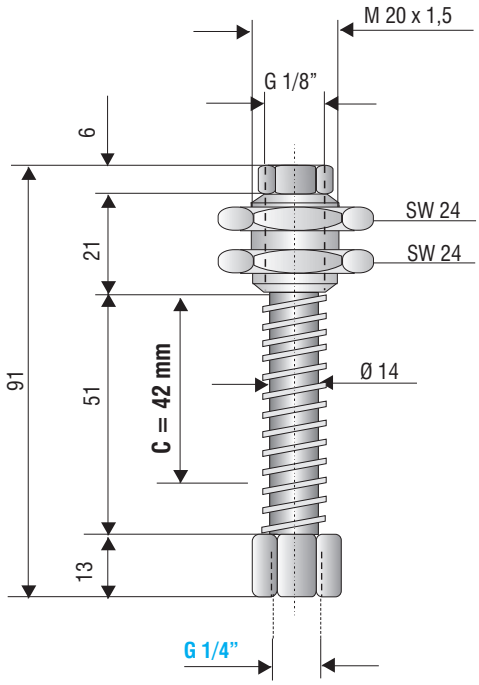

C = Hub
Travel
Course

Art. No. 50.050

G1/4" IG

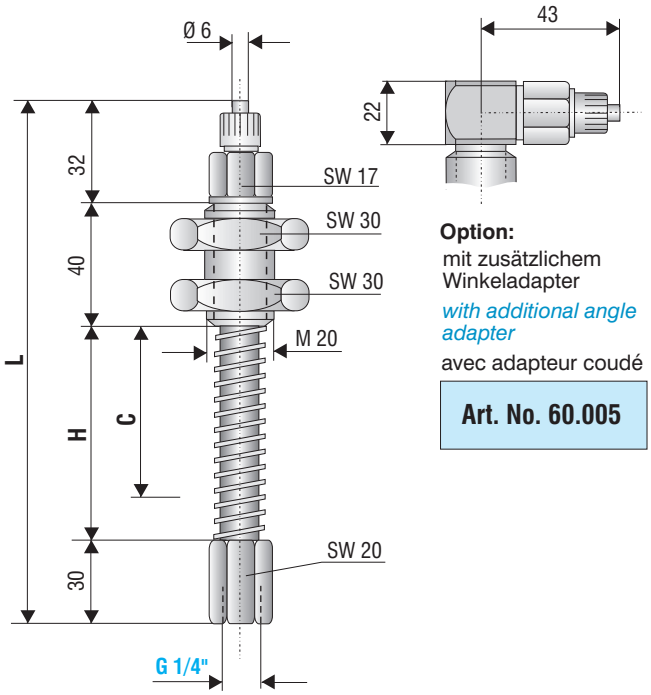

Option:
mit zusätzlichem Winkeladapter
with additional angle adapter
avec adapteur coudé

Art. No. 60.005

Art. No.	H	L	C
50.105	28	130	**17**
50.106	65	167	**50**
50.107	95	197	**74**

C = Hub
Travel
Course

Ø 11,5

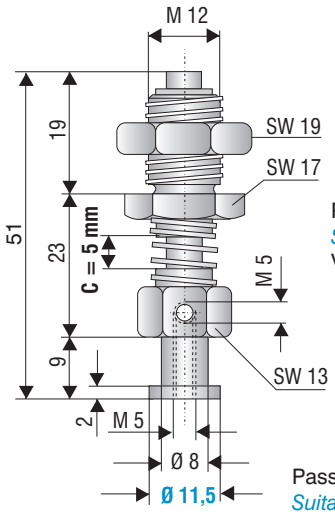

Passende **Flach**sauger:
*Suitable **flat** suction cups:*
Ventouses plates adaptés:

102.020.041
102.025.047
102.030.053
102.035.056
102.040.061

Passende **Balgen**sauger:
*Suitable **bellows** suction cups:*
Ventouses à soufflets adaptés:

1,5 Falten
1,5 folds
1,5 plis

23.020.026
23.025.030
23.030.037
23.030.125
23.040.045
23.040.126

C = Hub
Travel
Course

Art. No. 50.005

Ø 12

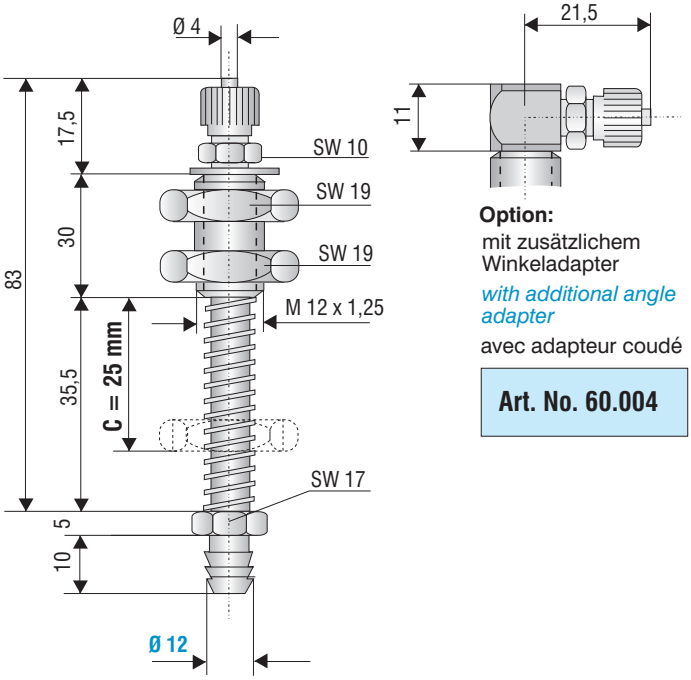

Option:
mit zusätzlichem Winkeladapter
with additional angle adapter
avec adapteur coudé

Art. No. 60.004

C = Hub
Travel
Course

Art. No. 50.043

Pneumatische Innengreifer und Außengreifer (verwendbar nur mit Druckregler)
Pneumatic ID/OD Grippers *(to be used only with pressure regulator)*
Préhenseurs pneumatiques int. et ext. (utilisable uniquement avec régulateur de pression)

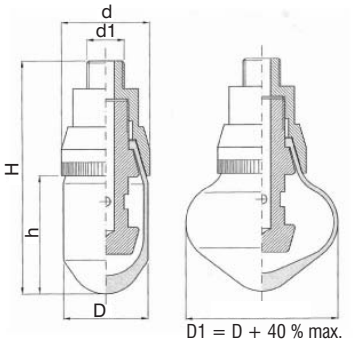

Art. Nr. NR (max.+80°C)	Art. Nr. Vulkollan (max.+90°C)	D	D1 D+40% max	d	d1	H	h	Speisedruck *Charge pressure* max.
51.009	**51.009-VU**	17	25	18,5	M 10	102	51	0,5 bar
51.005	**51.005-VU**	20	28	18,5	M 10	101	50	0,5 bar
51.008	**51.008-VU**	27	40	27,0	M 12	119	63	2,0 bar
51.007	**51.007-VU**	37	50	39,0	M 16	120	60	2,0 bar
51.006	**51.006-VU**	47	65	49,0	M 20	124	61	2,0 bar

Serie/*Series* 1300 - 1302

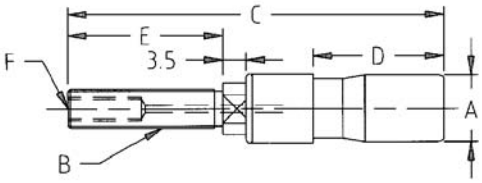

Serie/*Series* 1303 - 1318

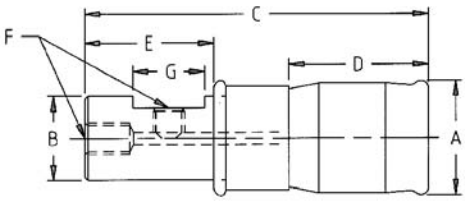

Art. No.	Material *Material* Matière	für Teileinnen-Ø *for inside dia.* pour pièces de Ø intérieur	entspannt *non-inflated* non gonflé **Ø A**	B	C	D	E	F	G	max.Druck *max.pressure* Pression max. **bar**	Gewicht *Weight* Poids **g**	Tragkraft* *Load capability** Capacité de levage* **kg**
1300	** Neopren(e) (CR) < 75 °C	8,5 - 10	8	M 6	51	17,5	21	M 3		4	8	1,5 - 0,15
1301		10 - 12	9,5	M 6	51	17,5	21	M 3		4	12	1,5 - 0,23
1302		12 - 17	11	M 8	51	17,5	21	M 5		4	17	3,0 - 1,1
1303		16 - 21	14	10	52	21	22	M 5	12	4	28	4,3 - 2,0
1304		21 - 27	19	14	56	22	22	M 5	12	5	60	7,4 - 3,0
1305		24 - 32	22	17	56	22	22	M 5	12	5	85	10,4 - 3,5
1306		28 - 36	25	19	55	22	22	M 5	12	5	105	13,5 - 3,0
1307		30 - 44	27	22	64	28	25	M 5	14	5	160	13,6 - 6,8
1308		32 - 52	29	25	76	34	30	M 5	15	5	245	24,9 - 9,1
1309		45 - 65	41	34	71	42	17,5	M 6	--	5	180	34,9 - 11,3
1310		58 - 85	51	44	90	52	26	M 6	18	5	370	59,0 - 22,7
1311		70 - 105	63	54	101	53	35	M 6	20	5	610	72,6 - 29,9

** auch in Silikon erhältlich/*also available in Silicone*/aussi disponible en Silicone

*bei glatter Oberfläche / *with smooth surface* / pour surfaces planes

G =
Druckluft
Compressed air
Air comprimé

4 x Gewinde-bohrungen
4 screw holes
4 filetages pour montage

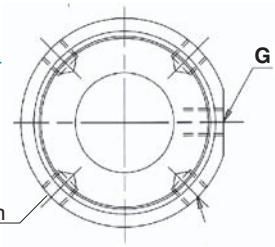

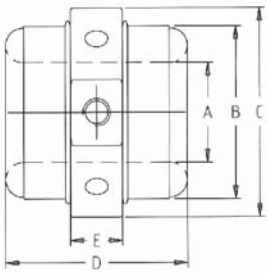

aufgeblasen
inflated
gonflé

Art. No.	Material *Material* Matière	für Teileaußen-Ø *for external dia.* *pour pièces de Ø extérieur*	entspannt *non-inflated* *non gonflé* **Ø A**	B	C	D	E	F	G	max. Druck *max. pressure* pression max. **bar**	Gewicht *Weight* *Poids* **g**	Tragkraft* *Load capability** *Capacité de levage** **kg**
1319	** Neopren(e) (CR) < 75 °C	5 - 15	19	33	40	36	10	M 5	M 5	1,4	60	1,8 - 5,0
1320		10 - 25	27	48	60	48	13	M 6	M 6	1,4	145	4,1 - 12,3
1321		15 - 35	37	58	70	52	14	M 6	M 6	1,4	210	9,1 - 16,3
1322		20 - 45	48	69	80	56	15	M 8	G1/8"	1,4	285	9,1 - 22,7

** auch in Silikon erhältlich/*also available in Silicone*/aussi disponible en Silicone

* bei glatter Oberfläche / *with smooth surface* / pour surfaces planes