600

Metric Size

Pitch 31,75 mm
H= 12,7 mm

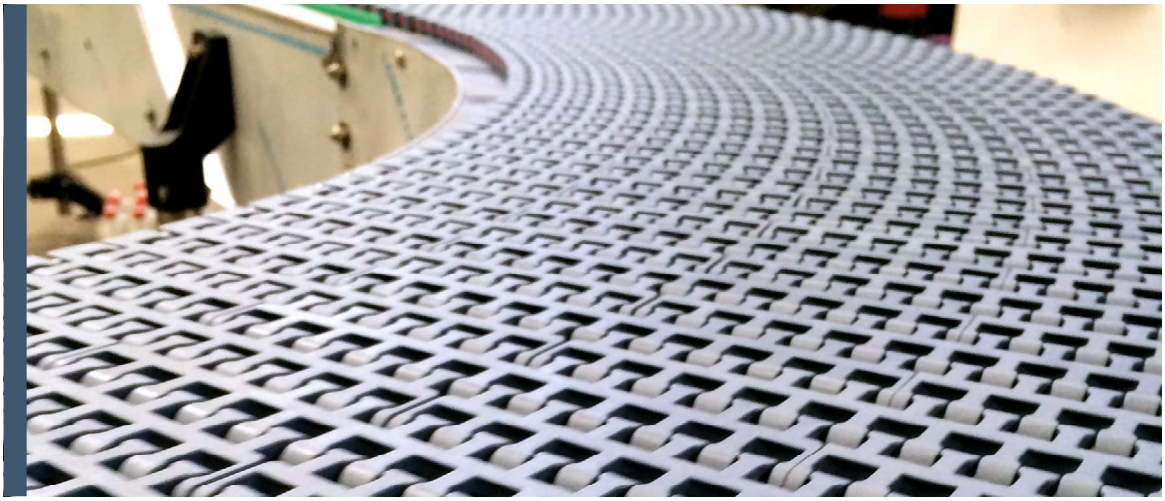

600 *Standard*
600 *Heavy duty*
600 *Small radius*
600 *Heavy duty /Small radius*
600 *with pusher*

1047 *Heavy duty profile*

600 *Standard*

Tappeto Modulare Curvilineo Serie 600, H=12,7 M=85
Side Flex Modular Belt Series 600, H=12,7 M=85 / Kurvengängige Mattenkette Serie 600, H=12,7 M=85

Metric Size

Backflex radius min.: 25 mm

CODE STRUCTURE GUIDE (Example)			
5421	03	0595	A
Series	*Material	Width	Version

pg. 234
pg. 420->428

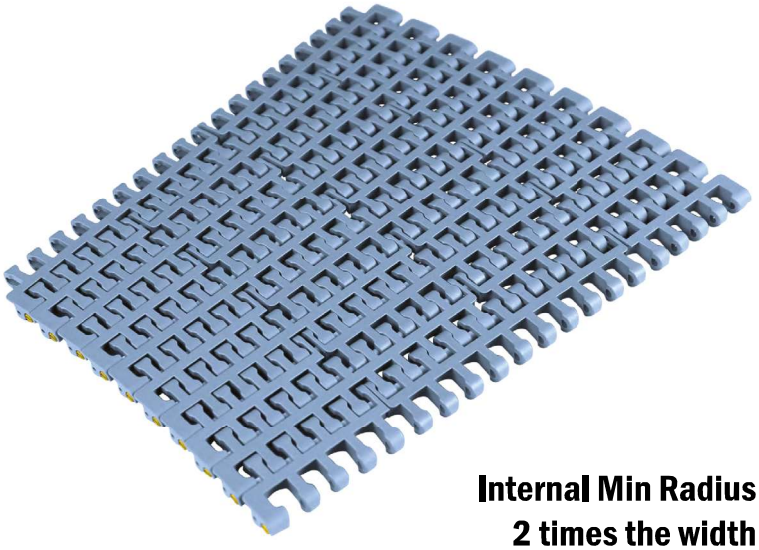

Internal Min Radius
2 times the width

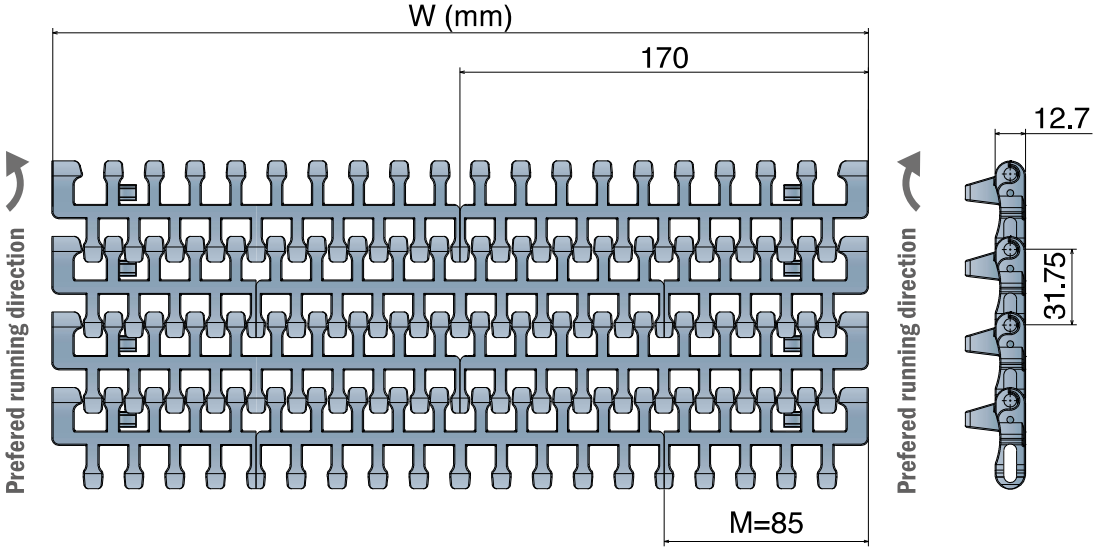

*Material

LFA - Code 01
Low friction Acetal

Max w. load:
Straight 30000 N/m
Curve 2500 N
Weight: 7,7 kg/m²
Temp. range: dry -40÷80 °C
wet -40÷65 °C
Pin material: PBT white

MX - Code 03
Performance PBT

Max w. load:
Straight 24000 N/m
Curve 2000 N
Weight: 7,5 kg/m²
Temp. range: dry -40÷120 °C
wet -40÷60 °C
Pin material: POM grey

MK - Code 08
Super Performance Acetal

Max w. load:
Straight 28800 N/m
Curve 2400 N
Weight: 7,7 kg/m²
Temp. range: dry -40÷80 °C
wet -40÷65 °C
Pin material: PBT white

MPX - Code 25
Lubricated Acetal

Max w. load:
Straight 30000 N/m
Curve 2500 N
Weight: 7,7 kg/m²
Temp. range: dry -40÷80 °C
wet -40÷65 °C
Pin material: PBT white

DKM - Code 16
Aramide Reinforced Acetal

Max w. load:
Straight 30000 N/m
Curve 2500 N
Weight: 7,7 kg/m²
Temp. range: dry -40÷80 °C
wet -40÷65 °C
Pin material: PBT white

MWX - Code 17
Polyamide Composite

Max w. load:
Straight 30000 N/m
Curve 2500 N
Weight: 8,0 kg/m²
Temp. range: dry -40÷104 °C
wet NR
Pin material: PBT white

STANDARD

Series	Material	Width	Version	min radius
5421	*	0255	A	510
5421	*	0340	A	680
5421	*	0425	A	850
5421	*	0510	A	1020
5421	*	0595	A	1190
5421	*	0680	A	1360
5421	*	0765	A	1530
5421	*	0850	A	1700

TAB

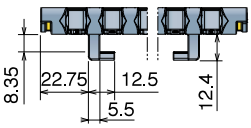

Series	Material	Width	Version	min radius
5421	*	0255	B	510
5421	*	0340	B	680
5421	*	0425	B	850
5421	*	0510	B	1020
5421	*	0595	B	1190
5421	*	0680	B	1360
5421	*	0765	B	1530
5421	*	0850	B	1700

REVERSE TAB

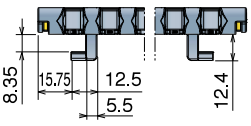

Series	Material	Width	Version	min radius
5421	*	0255	C	510
5421	*	0340	C	680
5421	*	0425	C	850
5421	*	0510	C	1020
5421	*	0595	C	1190
5421	*	0680	C	1360
5421	*	0765	C	1530
5421	*	0850	C	1700

TAB REVERSE TAB

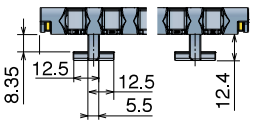

Series	Material	Width	Version	min radius
5421	*	0255	D	510
5421	*	0340	D	680
5421	*	0425	D	850
5421	*	0510	D	1020
5421	*	0595	D	1190
5421	*	0680	D	1360
5421	*	0765	D	1530
5421	*	0850	D	1700

600 Heavy duty

Tappeto Modulare Curvilineo Serie 600, H=12,7 M=85

Side Flex Modular Belt Series 600, H=12,7 M=85 / Kurvengängige Mattenkette Serie 600, H=12,7 M=85

Backflex radius min.: 25 mm

CODE STRUCTURE GUIDE (Example)			
5422	03	0340	E
Series	*Material	Width	Version

pg. 234
pg. 420->428

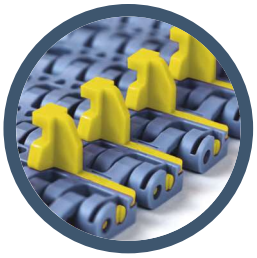

TAB
DK Material

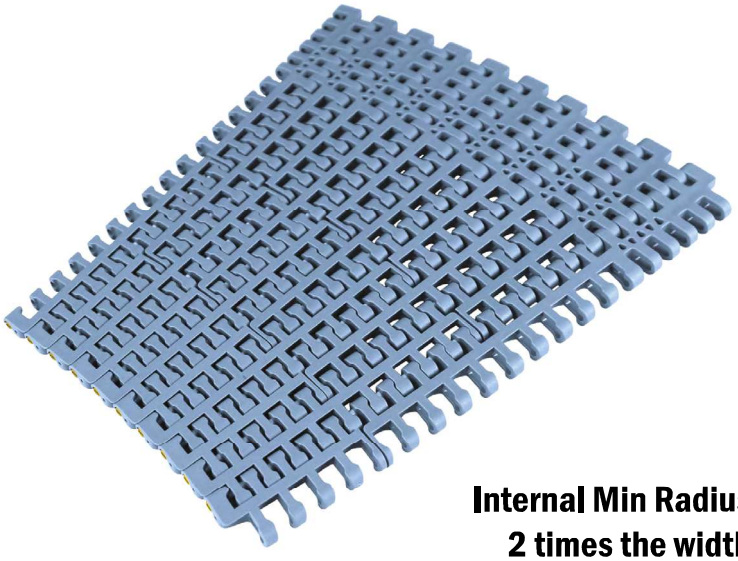

Internal Min Radius
2 times the width

*Material

LFA - Code 01
Low friction Acetal

Max w. load:
Straight 30000 N/m
Curve 3500 N
Weight: 8,3 kg/m²
Temp. range: dry -40÷80 °C, wet -40÷65 °C
Pin material: PBT white

MX - Code 03
Performance PBT

Max w. load:
Straight 24000 N/m
Curve 3000 N
Weight: 8,0 kg/m²
Temp. range: dry -40÷120 °C, wet -40÷60 °C
Pin material: POM grey

MK - Code 08
Super Performance Acetal

Max w. load:
Straight 28800 N/m
Curve 3350 N
Weight: 8,3 kg/m²
Temp. range: dry -40÷80 °C, wet -40÷65 °C
Pin material: PBT white

MPX - Code 25
Lubricated Acetal

Max w. load:
Straight 30000 N/m
Curve 3500 N
Weight: 8,3 kg/m²
Temp. range: dry -40÷80 °C, wet -40÷65 °C
Pin material: PBT white

DKM - Code 16
Aramide Reinforced Acetal

Max w. load:
Straight 30000 N/m
Curve 3500 N
Weight: 8,3 kg/m²
Temp. range: dry -40÷80 °C, wet -40÷65 °C
Pin material: PBT white

MWX - Code 17
Polyamide Composite

Max w. load:
Straight 30000 N/m
Curve 3500 N
Weight: 8,6 kg/m²
Temp. range: dry -40÷104 °C, wet NR
Pin material: PBT white

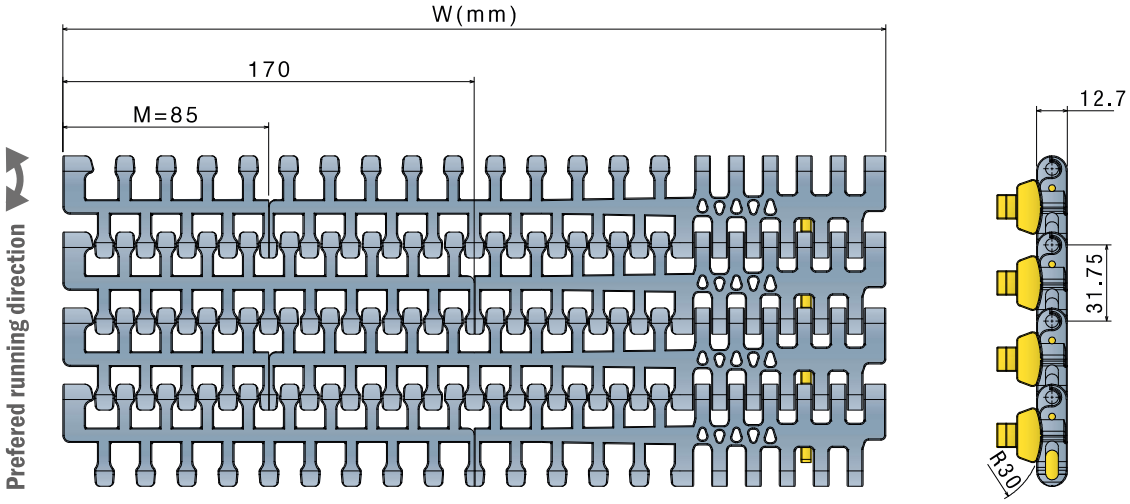

STANDARD

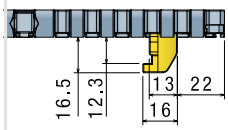

Series	Material	Width	Version	min radius
5422	*	0340	E	680
5422	*	0425	E	850
5422	*	0510	E	1020
5422	*	0595	E	1190
5422	*	0680	E	1360
5422	*	0765	E	1530
5422	*	0850	E	1700

600 *Small radius*

Tappeto Modulare Curvilineo Serie 600, H=12,7 M=85
Side Flex Modular Belt Series 600, H=12,7 M=85 / Kurvengängige Mattenkette Serie 600, H=12,7 M=85

Metric Size

Backflex radius min.: 25 mm

CODE STRUCTURE GUIDE (Example)			
5423	03	0340	A
Series	*Material	Width	Version

pg. 234
pg. 420->428

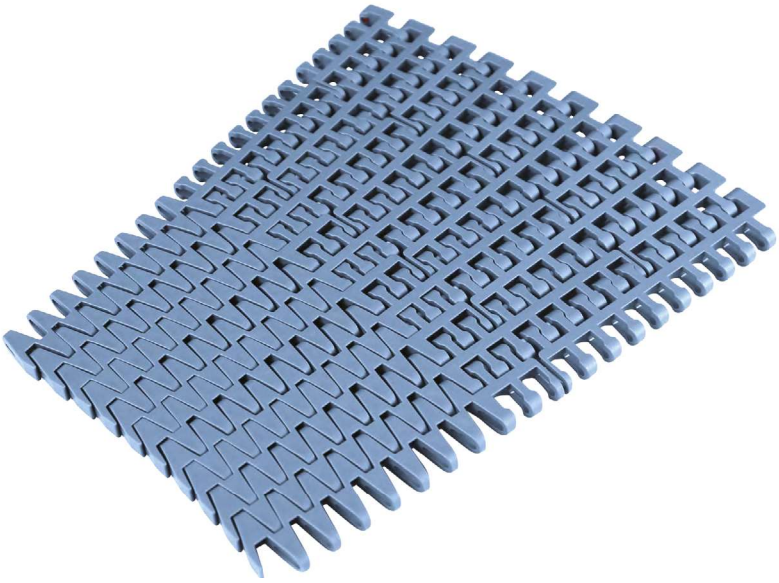

*Material

LFA - Code 01
Low friction Acetal

Max w. load:
Straight 30000 N/m
Curve 2500 N
Weight: 7,0 kg/m²
Temp. range: dry -40÷80 °C
wet -40÷65 °C
Pin material: PBT white

MX - Code 03
Performance PBT

Max w. load:
Straight 24000 N/m
Curve 2000 N
Weight: 6,8 kg/m²
Temp. range: dry -40÷120 °C
wet -40÷60 °C
Pin material: POM grey

MK - Code 08
Super Performance Acetal

Max w. load:
Straight 28800 N/m
Curve 2400 N
Weight: 7,0 kg/m²
Temp. range: dry -40÷80 °C
wet -40÷65 °C
Pin material: PBT white

MPX - Code 25
Lubricated Acetal

Max w. load:
Straight 30000 N/m
Curve 2500 N
Weight: 7,0 kg/m²
Temp. range: dry -40÷80 °C
wet -40÷65 °C
Pin material: PBT white

DKM - Code 16
Aramide Reinforced Acetal

Max w. load:
Straight 30000 N/m
Curve 2500 N
Weight: 7,0 kg/m²
Temp. range: dry -40÷80 °C
wet -40÷65 °C
Pin material: PBT white

MWX - Code 17
Polyamide Composite

Max w. load:
Straight 30000 N/m
Curve 2500 N
Weight: 7,3 kg/m²
Temp. range: dry -40÷104 °C
wet NR
Pin material: PBT white

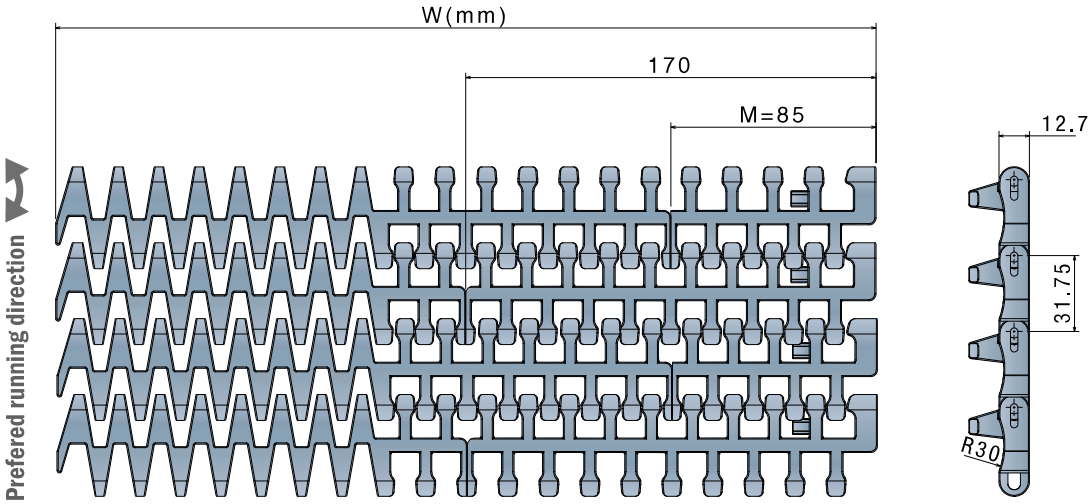

STANDARD

Series	Material	Width	Version	min radius
5423	*	0340	A	400
5423	*	0425	A	500
5423	*	0510	A	600
5423	*	0595	A	720
5423	*	0680	A	880
5423	*	0765	A	1040
5423	*	0850	A	1200

TAB

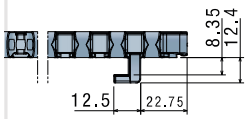

Series	Material	Width	Version	min radius
5423	*	0340	B	400
5423	*	0425	B	500
5423	*	0510	B	600
5423	*	0595	B	720
5423	*	0680	B	880
5423	*	0765	B	1040
5423	*	0850	B	1200

REVERSE TAB

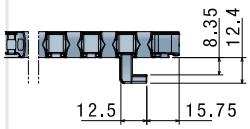

Series	Material	Width	Version	min radius
5423	*	0340	C	400
5423	*	0425	C	500
5423	*	0510	C	600
5423	*	0595	C	720
5423	*	0680	C	880
5423	*	0765	C	1040
5423	*	0850	C	1200

TAB REVERSE TAB

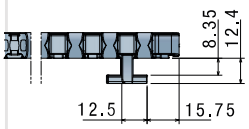

Series	Material	Width	Version	min radius
5423	*	0340	D	400
5423	*	0425	D	500
5423	*	0510	D	600
5423	*	0595	D	720
5423	*	0680	D	880
5423	*	0765	D	1040
5423	*	0850	D	1200

600 Heavy duty/Small radius

Tappeto Modulare Curvilineo Serie 600, H=12,7 M=170

Side Flex Modular Belt Series 600, H=12,7 M=170 / Kurvengängige Mattenkette Serie 600, H=12,7 M=170

Metric Size

CODE STRUCTURE GUIDE (Example)			
5424	03	425	E
Series	*Material	Width	Version

Backflex radius min.: 25 mm

pg. 234

pg. 420->428

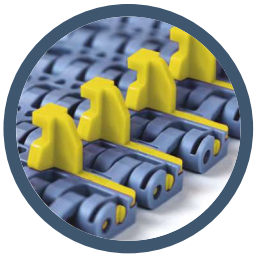

TAB
DK Material

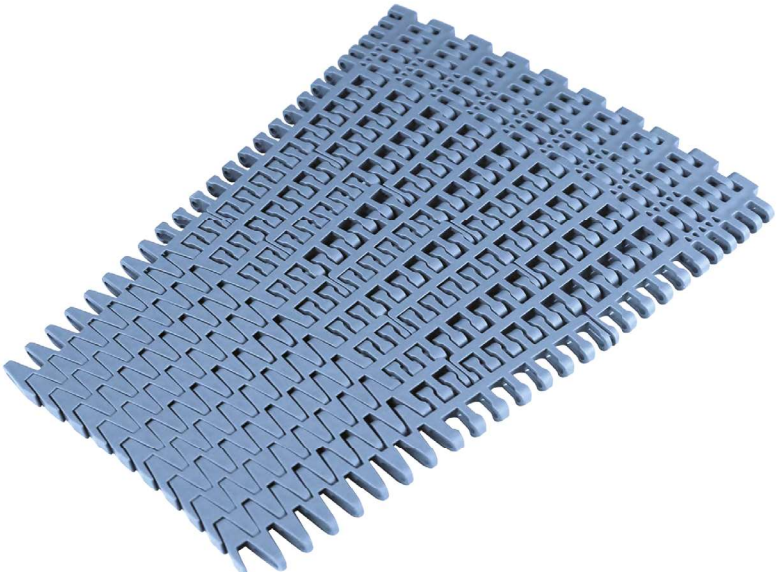

*Material

LFA - Code 01
Low friction Acetal

Max w. load:
Straight 30000 N/m
Curve 3500 N
Weight: 7,5 kg/m²
Temp. range: dry -40÷80 °C
wet -40÷65 °C
Pin material: PBT white

MX - Code 03
Performance PBT

Max w. load:
Straight 24000 N/m
Curve 3000 N
Weight: 7,3 kg/m²
Temp. range: dry -40÷120 °C
wet -40÷60 °C
Pin material: POM grey

MK - Code 08
Super Performance Acetal

Max w. load:
Straight 28800 N/m
Curve 3350 N
Weight: 7,5 kg/m²
Temp. range: dry -40÷80 °C
wet -40÷65 °C
Pin material: PBT white

MPX - Code 25
Lubricated Acetal

Max w. load:
Straight 30000 N/m
Curve 3500 N
Weight: 7,5 kg/m²
Temp. range: dry -40÷80 °C
wet -40÷65 °C
Pin material: PBT white

DKM - Code 16
Aramide Reinforced Acetal

Max w. load:
Straight 30000 N/m
Curve 3500 N
Weight: 7,5 kg/m²
Temp. range: dry -40÷80 °C
wet -40÷65 °C
Pin material: PBT white

MWX - Code 17
Polyamide Composite

Max w. load:
Straight 30000 N/m
Curve 3500 N
Weight: 7,7 kg/m²
Temp. range: dry -40÷104 °C
wet NR
Pin material: PBT white

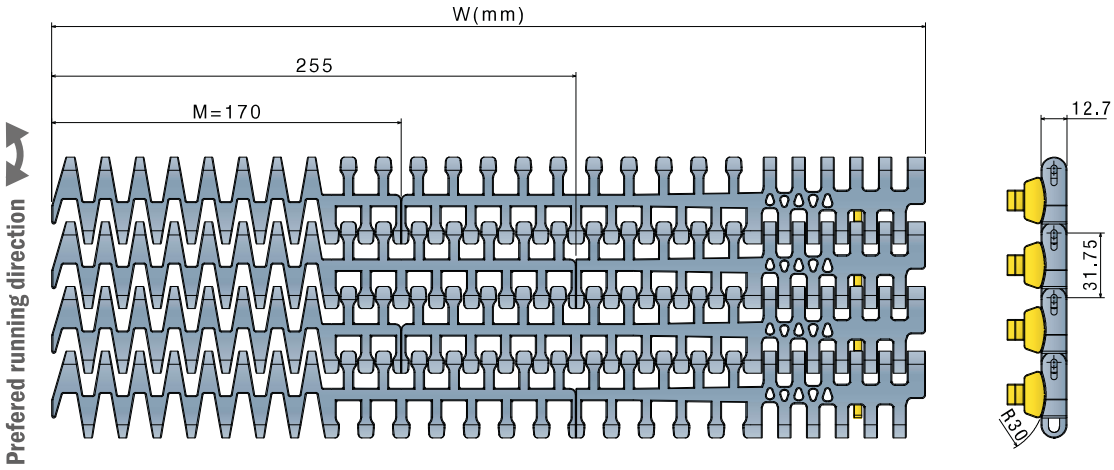

STANDARD

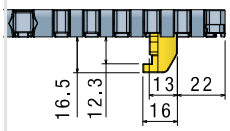

Series	Material	Width	Version	min radius
5424	*	0425	E	500
5424	*	0510	E	600
5424	*	0595	E	720
5424	*	0680	E	880
5424	*	0765	E	1040
5424	*	0850	E	1200

600 *with pusher* Tappeto Modulare Curvilineo Serie 600, H=12,7 M=85

Side Flex Modular Belt Series 600, H=12,7 M=85 / Kurvengängige Mattenkette Serie 600, H=12,7 M=85

Metric Size

Consult our engineering department for details.

pg. 234
pg. 420->428

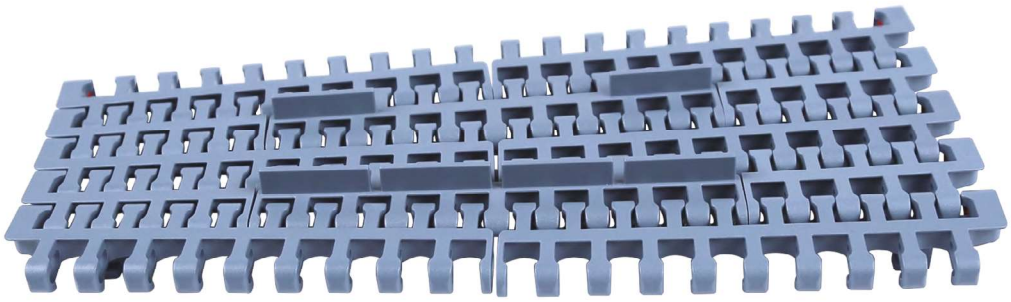

1047 Guida tappeto

Belt side guide / Seitenführung für Mattenkette

Part	Article-Nr.	Width
1047	104700BC	3 m

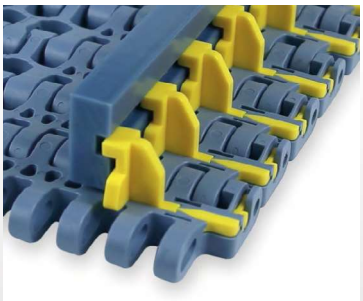

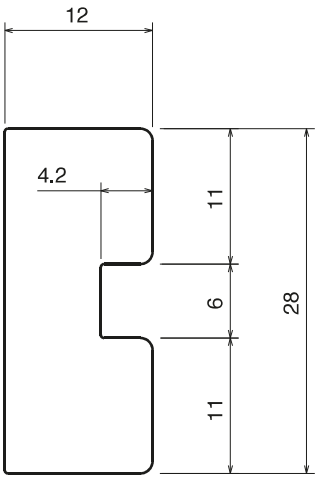

500

Imperial Size

Pitch 50,8 mm
H= 24 mm

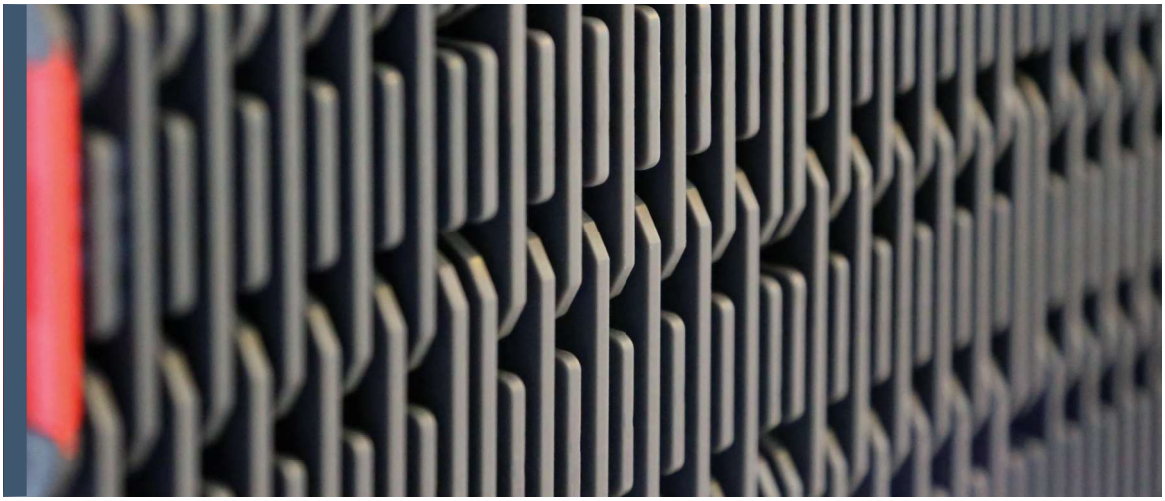

500 RR
Combs

500 RR

Tappeto Modulare 500 RR
Raised Rib Belt Series 500 RR / Modulare Mattenkette 500 RR

Imperial Size

CODE STRUCTURE GUIDE (Example)			
1348	11	0090	A
Series	*Material	Width	Version

pg. 235
pg. 420->428

*Material			
PP - Code 02 *Polypropylene*		**PPX - Code 11** *Polypropylene*	
Max w. load:	30000 N/m	**Max w. load:**	30000 N/m
Weight:	10,65 kg/m²	**Weight:**	10,65 kg/m²
Temp. range:	4÷104 °C	**Temp. range:**	4÷104 °C
Pin material:	PP grey	**Pin material:**	PP grey

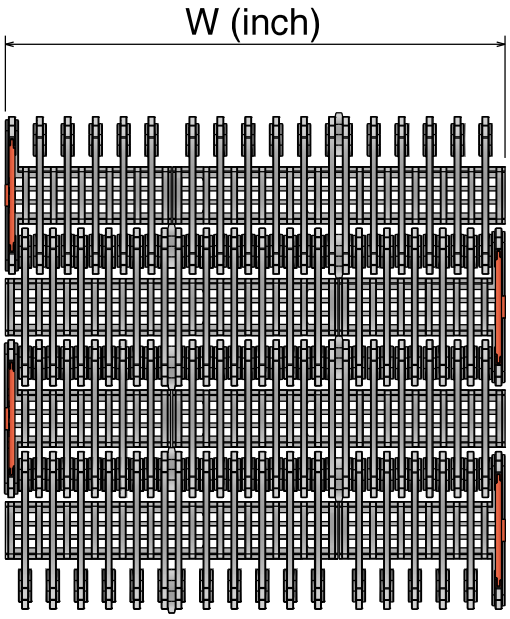

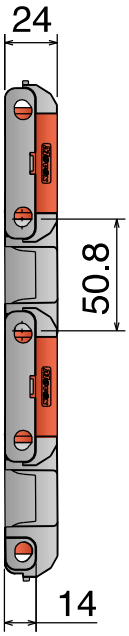

Series	Material	Width
1348	*	0060
1348	*	0063
1348	*	0066
1348	*	0069
1348	*	0072
1348	*	0075
1348	*	0078
1348	*	0081
1348	*	0084
1348	*	0087
1348	*	0090

Series	Material	Width
1348	*	0093
1348	*	0096
1348	*	0099
1348	*	0102
1348	*	0105
1348	*	0108
1348	*	0111
1348	*	0114
1348	*	0117
1348	*	0120

389 Pettine
Combs / Fingerplatte

Type A

Part	Article-Nr.
389	38901

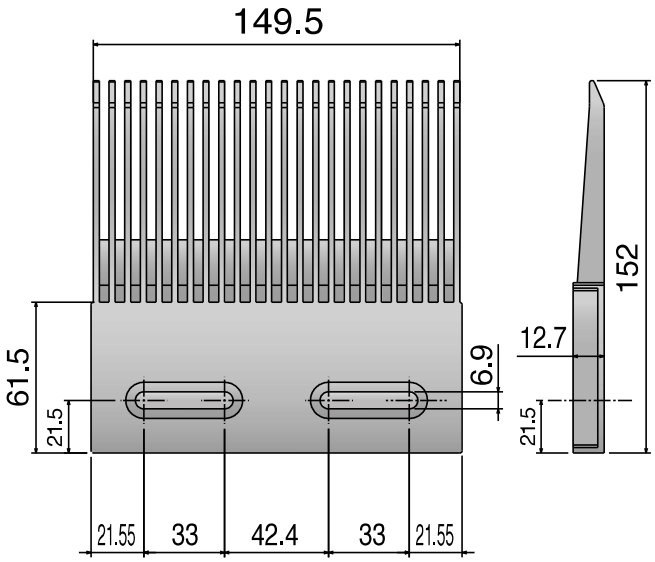

Type B

Part	Article-Nr.
389	38902

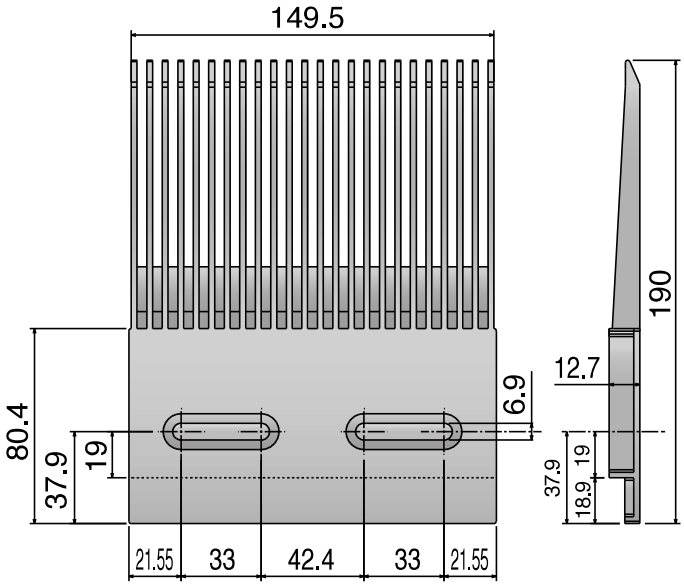

260/261

Metric Size

Pitch 25,4 mm
H= 21 mm / 25 mm / 28,7 mm

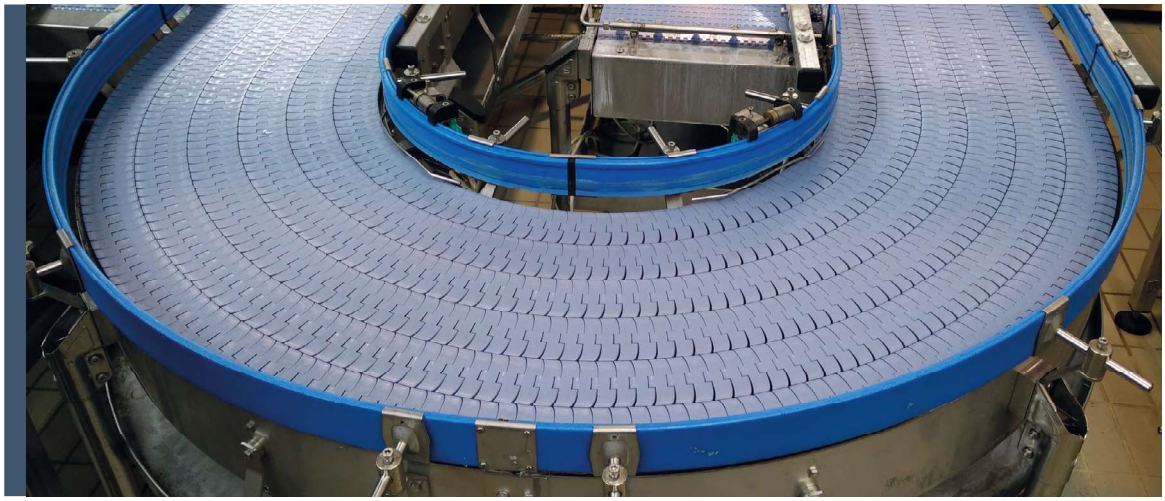

260 M FT
260 M FG
260 TAB

261 M
261 TAB

260 M FT

Catena curvilinea
Sideflexing belt/chain / Kurvengängige Mattenkette

Magnetic System

Part	Article-Nr.	Ref.	A	Weight LFA
1151	11510103	260 M K330	83,8	1,75
1151	11510105	260 M K450	114,3	1,95

pg. 230-231
pg. 125->131
pg. 420->428

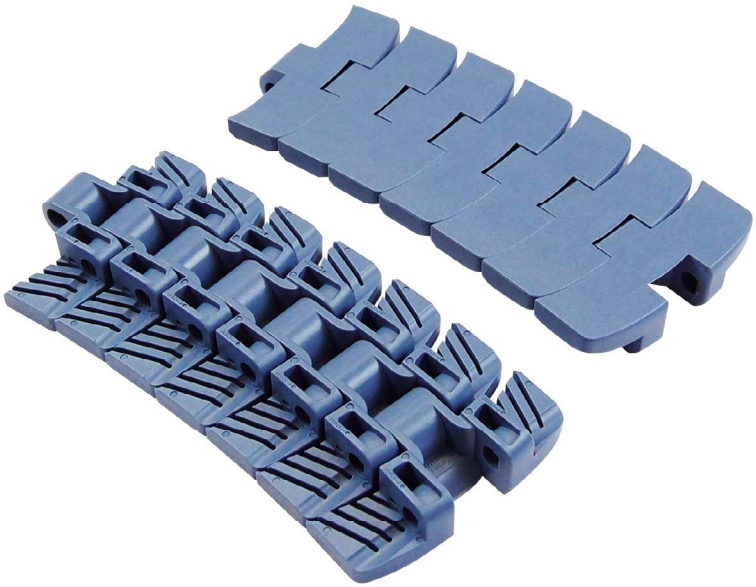

***Material**

LFA - Code 01
Low friction Acetal

Max w. load:	2000 N/m
Sideflex radius:	500 mm
Pin material:	PBT white

MX - Code 03
Performance PBT

Max w. load:	1600 N/m
Sideflex radius:	500 mm
Pin material:	Ferritic SS

MK - Code 08
Super Performance Acetal

Max w. load:	1950 N/m
Sideflex radius:	500 mm
Pin material:	Ferritic SS

MPX - Code 25
Lubricated Acetal

Max w. load:	2000 N/m
Sideflex radius:	mm
Pin material:	Ferritic SS

DKM - Code 16
Aramide Reinforced Acetal

Max w. load:	2000 N/m
Sideflex radius:	mm
Pin material:	Ferritic SS

MWX - Code 17
Polyamide Composite

Max w. load:	2000 N/m
Sideflex radius:	mm
Pin material:	Ferritic SS

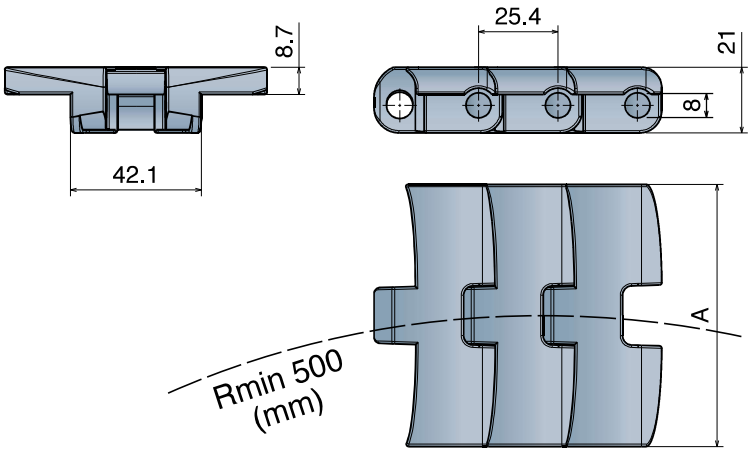

260 M FG

Catena curvilinea
Sideflexing belt/chain / Kurvengängige Mattenkette

Magnetic System

Part	Article-Nr.	Ref.	A	Weight LFA
1154	11540103	260 M FG K330	83,8	1,50
1154	11540105	260 M FG K450	114,3	1,65

pg. 230-231
pg. 125->131
pg. 420->428

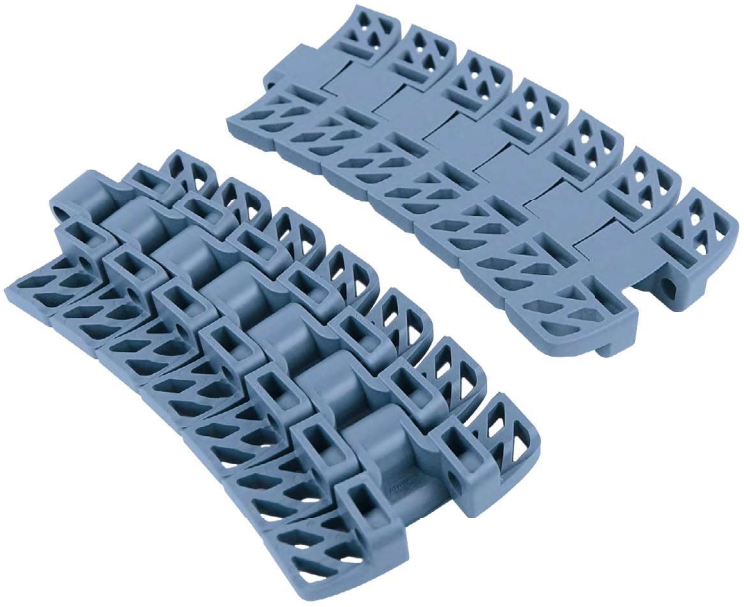

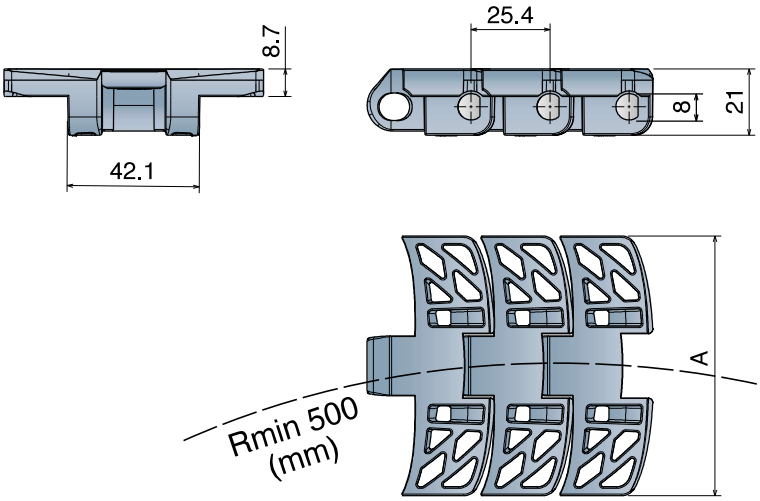

***Material**

LFA - Code 01
Low friction Acetal

Max w. load:	2000 N/m
Sideflex radius:	500 mm
Pin material:	PBT white

MX - Code 03
Performance PBT

Max w. load:	1600 N/m
Sideflex radius:	500 mm
Pin material:	Ferritic SS

MK - Code 08
Super Performance Acetal

Max w. load:	1950 N/m
Sideflex radius:	500 mm
Pin material:	Ferritic SS

MPX - Code 25
Lubricated Acetal

Max w. load:	2000 N/m
Sideflex radius:	mm
Pin material:	Ferritic SS

DKM - Code 16
Aramide Reinforced Acetal

Max w. load:	2000 N/m
Sideflex radius:	mm
Pin material:	Ferritic SS

MWX - Code 17
Polyamide Composite

Max w. load:	2000 N/m
Sideflex radius:	mm
Pin material:	Ferritic SS

260 TAB

Catena curvilinea
Sideflexing belt/chain / Kurvengängige Mattenkette

Tab System

Part	Article-Nr.	Ref.	A	Weight LFA
1152	11520103	260 TAB K330	83,8	1,85
1152	11520105	260 TAB K450	114,3	2,00

pg. 230-231
pg. 139
pg. 420->428

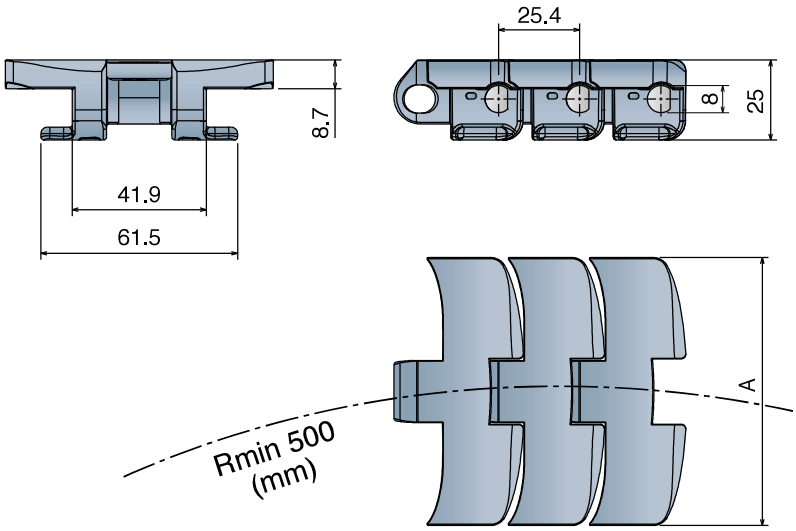

***Material**

LFA - Code 01
Low friction Acetal

Max w. load:	2000 N/m
Sideflex radius:	500 mm
Pin material:	PBT white

MX - Code 03
Performance PBT

Max w. load:	1600 N/m
Sideflex radius:	500 mm
Pin material:	Ferritic SS

MK - Code 08
Super Performance Acetal

Max w. load:	1950 N/m
Sideflex radius:	500 mm
Pin material:	Ferritic SS

MPX - Code 25
Lubricated Acetal

Max w. load:	2000 N/m
Sideflex radius:	mm
Pin material:	Ferritic SS

DKM - Code 16
Aramide Reinforced Acetal

Max w. load:	2000 N/m
Sideflex radius:	mm
Pin material:	Ferritic SS

MWX - Code 17
Polyamide Composite

Max w. load:	2000 N/m
Sideflex radius:	mm
Pin material:	Ferritic SS

261 M FT

Catena curvilinea
Sideflexing belt/chain / Kurvengängige Mattenkette

Magnetic System

Part	Article-Nr.	Ref.	A	Weight LFA
1153	11530103	260 M K330	83,8	2,10
1153	11530105	260 M K450	114,3	2,26

pg. 230-231
pg. 132->138
pg. 420->428

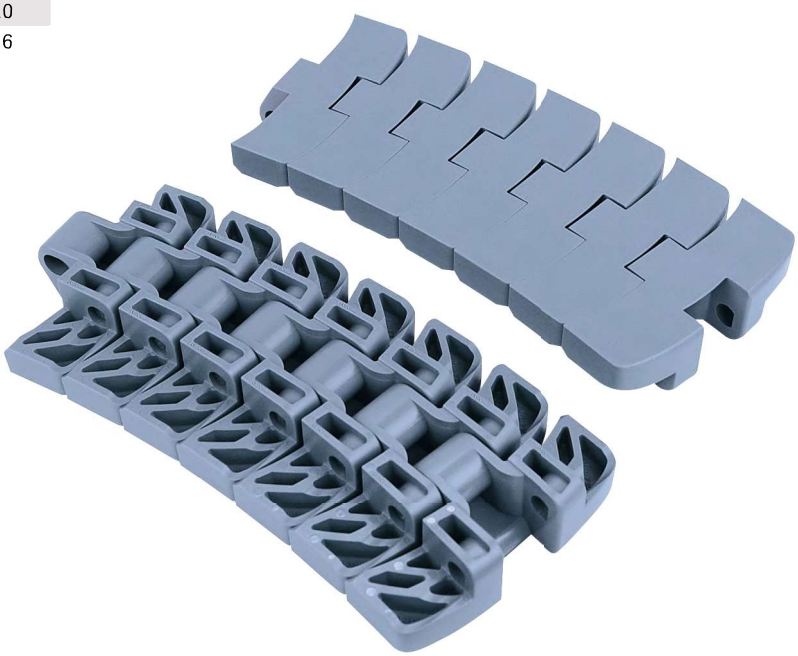

***Material**

LFA - Code 01
Low friction Acetal

Max w. load:	2000 N/m
Sideflex radius:	500 mm
Pin material:	PBT white

MX - Code 03
Performance PBT

Max w. load:	1600 N/m
Sideflex radius:	500 mm
Pin material:	Ferritic SS

MK - Code 08
Super Performance Acetal

Max w. load:	1950 N/m
Sideflex radius:	500 mm
Pin material:	Ferritic SS

MPX - Code 25
Lubricated Acetal

Max w. load:	2000 N/m
Sideflex radius:	mm
Pin material:	Ferritic SS

DKM - Code 16
Aramide Reinforced Acetal

Max w. load:	2000 N/m
Sideflex radius:	mm
Pin material:	Ferritic SS

MWX - Code 17
Polyamide Composite

Max w. load:	2000 N/m
Sideflex radius:	mm
Pin material:	Ferritic SS

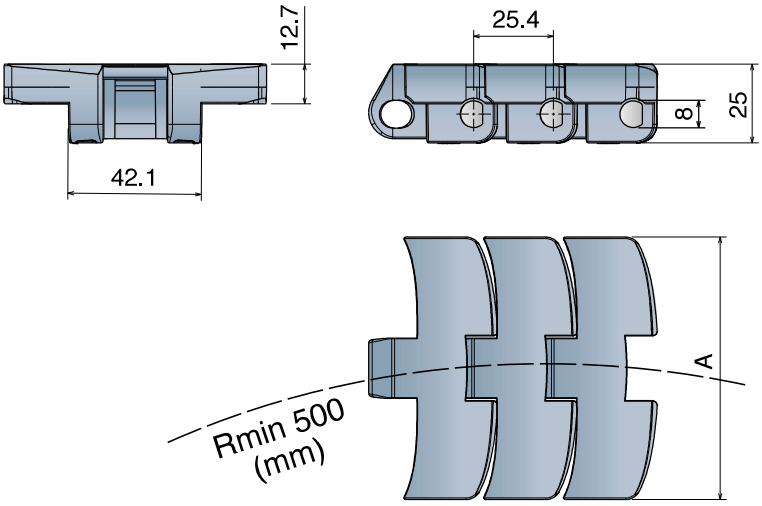

261 TAB

Catena curvilinea
Sideflexing belt/chain / Kurvengängige Mattenkette

Tab System

Part	Article-Nr.	Ref.	A	Weight LFA
1190	11900103	261 TAB K330	83,8	1,85
1190	11900105	261 TAB K450	114,3	2,00

pg. 230-231
pg. 139
pg. 420->428

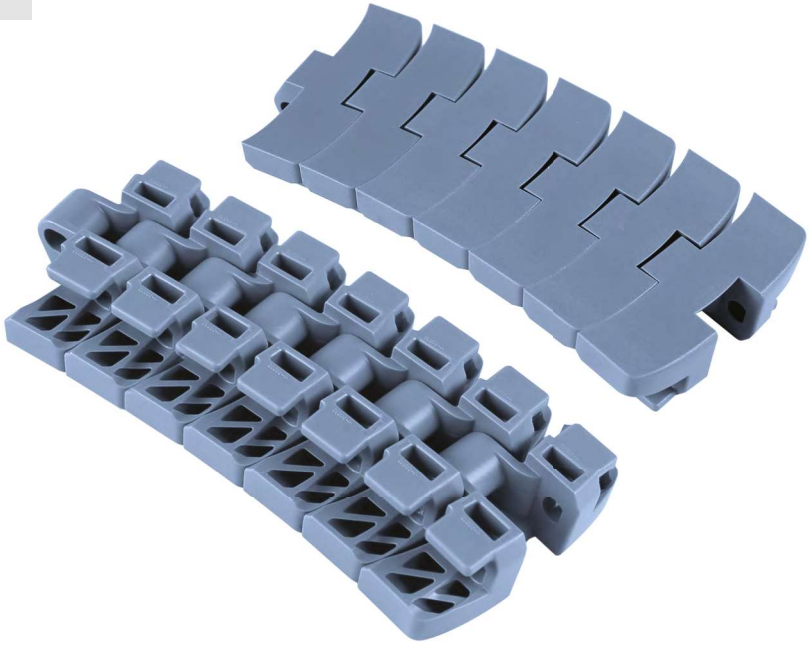

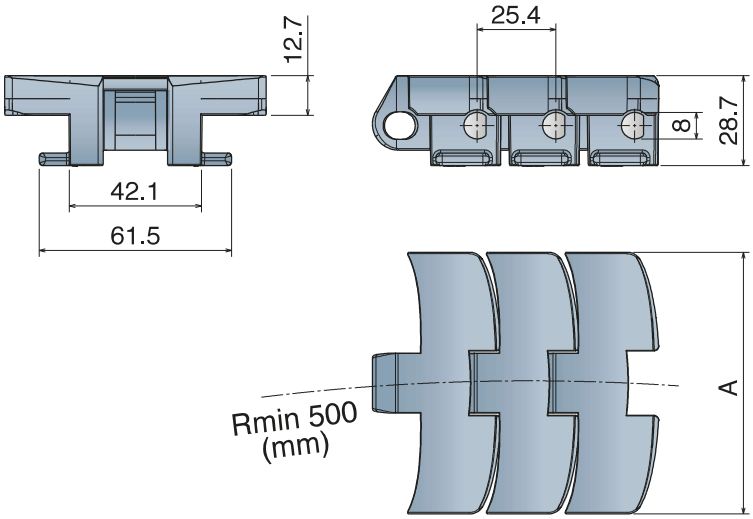

***Material**

LFA - Code 01
Low friction Acetal

Max w. load:	2000 N/m
Sideflex radius:	500 mm
Pin material:	PBT white

MX - Code 03
Performance PBT

Max w. load:	1600 N/m
Sideflex radius:	500 mm
Pin material:	Ferritic SS

MK - Code 08
Super Performance Acetal

Max w. load:	1950 N/m
Sideflex radius:	500 mm
Pin material:	Ferritic SS

MPX - Code 25
Lubricated Acetal

Max w. load:	2000 N/m
Sideflex radius:	mm
Pin material:	Ferritic SS

DKM - Code 16
Aramide Reinforced Acetal

Max w. load:	2000 N/m
Sideflex radius:	mm
Pin material:	Ferritic SS

MWX - Code 17
Polyamide Composite

Max w. load:	2000 N/m
Sideflex radius:	mm
Pin material:	Ferritic SS